Please check the examination details below before entering your candidate information

Candidate surname	Other names

Centre Number | Candidate Number

Pearson Edexcel International Advanced Level

Time 1 hour 20 minutes

Paper reference **WBI16/01**

Biology

International Advanced Level
UNIT 6: Practical Skills in Biology II

You must have:
Scientific calculator, ruler, HB pencil

Total Marks

Instructions

- Use **black** ink or ball-point pen.
- **Fill in the boxes** at the top of this page with your name, centre number and candidate number.
- Answer **all** questions.
- Answer the questions in the spaces provided
  – *there may be more space than you need.*

Information

- The total mark for this paper is 50.
- The marks for **each** question are shown in brackets
  – *use this as a guide as to how much time to spend on each question.*

Advice

- Read each question carefully before you start to answer it.
- Try to answer every question.
- Check your answers if you have time at the end.

Turn over ▶

P71872A

©2022 Pearson Education Ltd.

B:1/1/1/1/

P 7 1 8 7 2 A 0 1 2 0

Pearson

Answer ALL questions.

1 The photograph shows an aquatic plant, *Cabomba caroliniana*.



(Source: © Dorling Kindersley Ltd/Alamy Stock Photo)

These plants live in ponds, lakes and slow-flowing rivers in North and South America.

If the stem of the plant is cut underwater, bubbles of oxygen gas are released from the cut end of the stem during photosynthesis.

DO NOT WRITE IN THIS AREA
DO NOT WRITE IN THIS AREA
DO NOT WRITE IN THIS AREA

(a) Describe an experiment to investigate the effect of temperature on the rate of photosynthesis in *Cabomba caroliniana*.

(5)

DO NOT WRITE IN THIS AREA
DO NOT WRITE IN THIS AREA
DO NOT WRITE IN THIS AREA

(b) Describe how oxygen is produced during photosynthesis.

(3)

(Total for Question 1 = 8 marks)

DO NOT WRITE IN THIS AREA
DO NOT WRITE IN THIS AREA
DO NOT WRITE IN THIS AREA

2 The photograph shows a cane toad, *Rhinella marina*.



(Source: © Natalia Kuzmina/Alamy Stock Photo)

This amphibian is an invasive species in northern Australia.

Pesticides can kill these amphibians quickly.

The outer layer of amphibian skin is only 1 or 2 cells thick. This compares with the skin of mammals, which is 20 to 30 cells thick.

Caffeine is a chemical with similar properties to pesticides.

A scientist investigated the diffusion of caffeine across skin samples from cane toads.

Caffeine solution with a concentration of 200 mg dm^{-3} was added to the top chamber of a diffusion cell.

Samples of solution from the bottom chamber were removed every hour and the concentration of caffeine measured.

The diagram shows a diffusion cell used to measure the rate of diffusion across a skin sample.

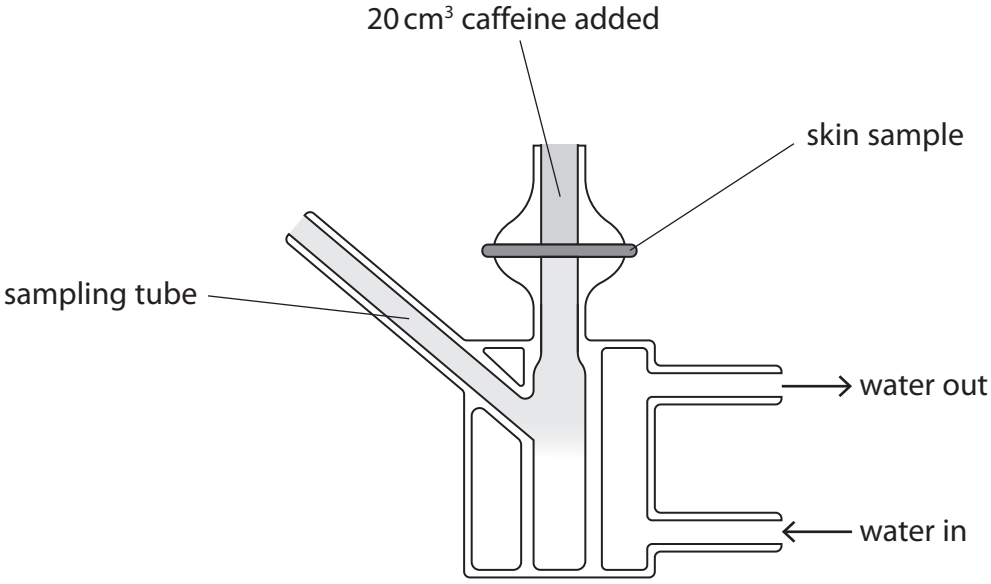

DO NOT WRITE IN THIS AREA
DO NOT WRITE IN THIS AREA
DO NOT WRITE IN THIS AREA

The graph shows the results of this investigation.

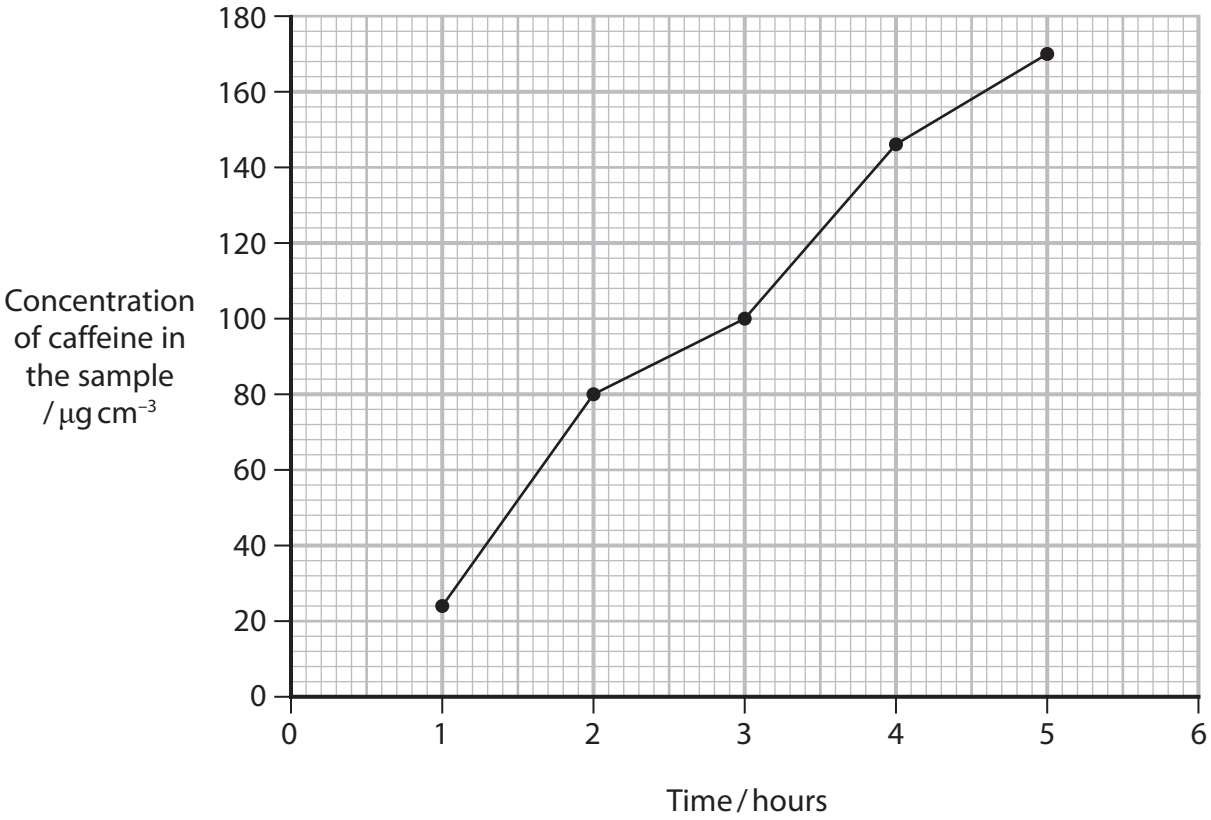

(a) (i) Describe how 20 cm^3 of caffeine solution with a concentration of 200 mg dm^{-3} could be prepared.

(1)

.....

.....

.....

(ii) Calculate the rate of diffusion per minute between 1 and 2 hours.

(1)

..... μg cm^{-3} min^{-1}

DO NOT WRITE IN THIS AREA
DO NOT WRITE IN THIS AREA
DO NOT WRITE IN THIS AREA

(iii) The rate of diffusion between 4 and 5 hours is 0.40 μg cm^{-3} min^{-1}.

Calculate the percentage decrease in the rate of diffusion between 1 and 2 hours and between 4 and 5 hours.

(1)

..... %

(iv) Caffeine is a polar molecule.

Explain the difference in the rate of diffusion between 1 and 2 hours compared with the rate of diffusion between 4 and 5 hours.

(2)

.....

.....

.....

.....

.....

.....

DO NOT WRITE IN THIS AREA

DO NOT WRITE IN THIS AREA

DO NOT WRITE IN THIS AREA

(b) (i) State **one** abiotic and **one** biotic variable that could affect this investigation.

(2)

Abiotic variable

.....

Biotic variable

.....

(ii) Choose **one** of the variables you have identified in (b)(i).

Describe how this variable could be controlled and the effect it could have on the results if it is not controlled.

(2)

Variable

.....

Describe how this variable is controlled.

.....

.....

.....

.....

Describe the effect it could have on the results if it is not controlled.

.....

.....

.....

.....

(Total for Question 2 = 9 marks)

DO NOT WRITE IN THIS AREA
DO NOT WRITE IN THIS AREA
DO NOT WRITE IN THIS AREA

3 The photograph shows one variety of wheat and the grains it produces.



(Source: © Li Ding/Alamy Stock Photo)

A scientist observed that the germination of wheat grains was affected by the presence of arsenic ions in the soil.

Groups of 30 grains were placed on filter paper in Petri dishes. Each Petri dish had 0.5 cm^3 of water with a different concentration of arsenic ions added.

The Petri dishes were incubated at 23 °C for four days. The percentage of seeds that germinated was recorded.

The procedure was repeated a number of times.

DO NOT WRITE IN THIS AREA
DO NOT WRITE IN THIS AREA
DO NOT WRITE IN THIS AREA

The table shows the results of this investigation.

Concentration of arsenic ions / mg dm^{-3}	Mean percentage of seeds germinated after 4 days %
0.0	100
0.5	84 ± 2
1.0	85 ± 2
2.0	81 ± 6
4.0	77 ± 8
8.0	65 ± 14
16.0	66 ± 2

(a) (i) Identify **one** risk associated with this investigation and how you could reduce this risk.

(2)

Risk

How to reduce this risk

(ii) State a suitable null hypothesis for this investigation.

(1)

DO NOT WRITE IN THIS AREA
DO NOT WRITE IN THIS AREA
DO NOT WRITE IN THIS AREA

(iii) Plot a suitable graph to show the effect of the concentration of arsenic ions on the percentage germination of wheat grains.

(3)

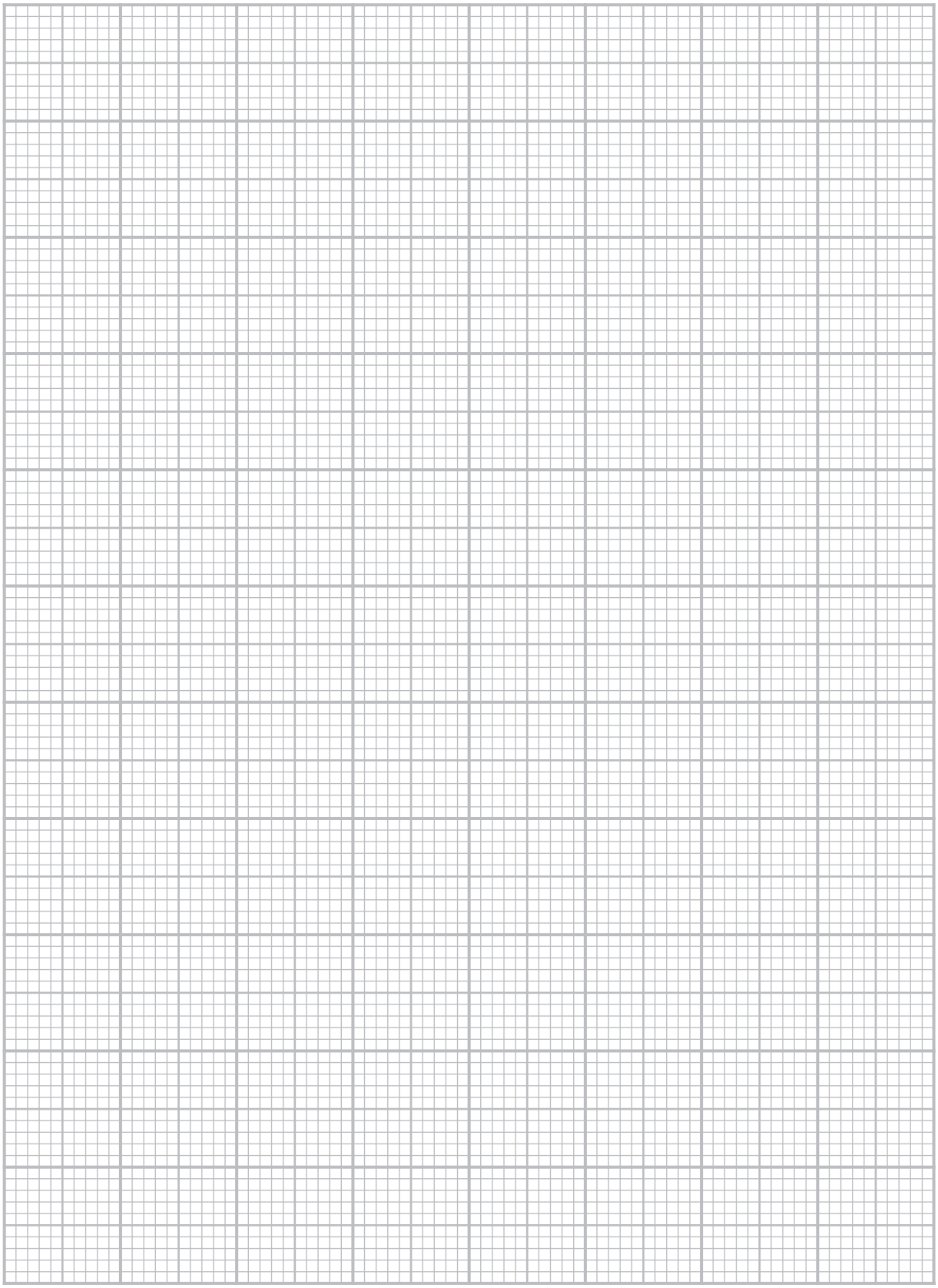

DO NOT WRITE IN THIS AREA
DO NOT WRITE IN THIS AREA
DO NOT WRITE IN THIS AREA

(b) The scientist used a statistical test to analyse the data.

To calculate the correlation coefficient, the scientist produced this table.

Concentration of arsenic ions / mg dm^{-3} (a)	Mean percentage of grains germinated after 4 days (%) (b)	Rank (a)	Rank (b)	d	d^2
0.0	100	1	1	0	
0.5	84	2	3	–1	
1.0	85	3	2	1	
2.0	81	4	4	0	
4.0	77	5	5	0	
8.0	65	6	7	–1	
16.0	66	7	6	1	

(i) Calculate the correlation coefficient (r_s) using the formula:

(2)

$$r_s = 1 - \frac{6\sum d^2}{n(n^2 - 1)}$$

Where:

$\sum$ = the sum of

d = the difference between each pair of ranks

n = the size of the sample (number of pairs of values)

Answer .....

DO NOT WRITE IN THIS AREA
DO NOT WRITE IN THIS AREA
DO NOT WRITE IN THIS AREA

(ii) The table shows some critical values for this statistical test.

Number of pairs of values	Level of significance (p)		
	0.10	0.05	0.01
4	1.000	–	–
5	0.900	1.000	–
6	0.829	0.886	1.000
7	0.714	0.786	0.929
8	0.643	0.738	0.881
9	0.600	0.700	0.833
10	0.564	0.648	0.794

Comment on the conclusion that can be drawn from this investigation.

Use your graph, your calculated r_s value and the table of critical values to support your answer.

(3)

DO NOT WRITE IN THIS AREA
DO NOT WRITE IN THIS AREA
DO NOT WRITE IN THIS AREA

(c) (i) In breeding experiments, scientists select varieties of wheat with different characteristics.

Explain why some varieties of wheat have different tolerances to arsenic ions.

(2)

(ii) Explain how this investigation could be extended to study the effect of arsenic ions on the growth of wheat plants from germinating wheat grains.

(3)

(Total for Question 3 = 16 marks)

DO NOT WRITE IN THIS AREA
DO NOT WRITE IN THIS AREA
DO NOT WRITE IN THIS AREA

4 The photograph shows a polychaete, *Sabellastarte spectabilis*, found in the Indian Ocean.

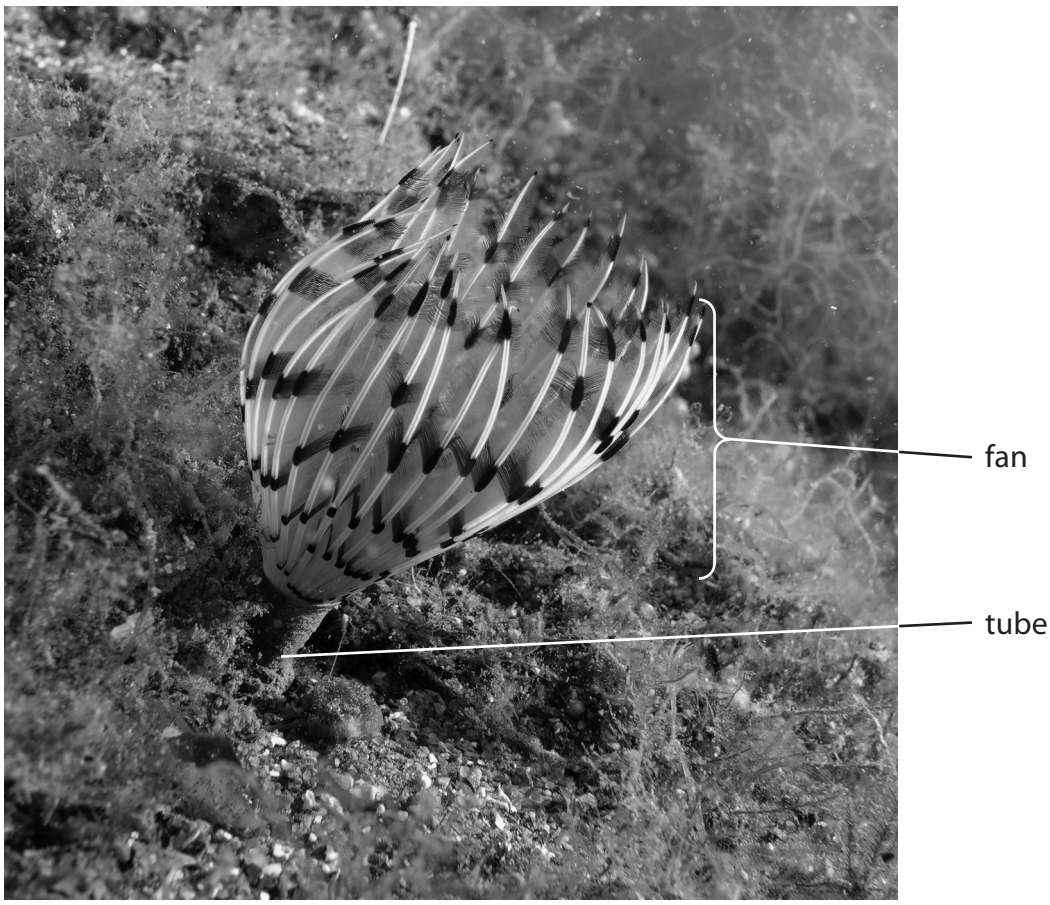

(Source: © LABETAA Andre/Shutterstock)

This animal can be kept in tanks in a laboratory.

This animal uses the fan to feed on organic particles suspended in sea water.

When the fan is touched, the fan is withdrawn into the tube by a reflex action.

The fan then extends to allow the animal to continue feeding.

A student observed that some of these animals withdrew their fans completely while other animals showed very little reaction to touch.

The student formed the following hypothesis:

the greater the number of touches, the less the animal reacts.

DO NOT WRITE IN THIS AREA
DO NOT WRITE IN THIS AREA
DO NOT WRITE IN THIS AREA

Plan an investigation to find evidence to support or reject this hypothesis.

(a) Describe preliminary practical work that you might undertake to ensure your proposed method would provide quantitative results.

(3)

DO NOT WRITE IN THIS AREA
DO NOT WRITE IN THIS AREA
DO NOT WRITE IN THIS AREA

(b) Devise a detailed method, including how you would control and monitor important variables.

(8)

DO NOT WRITE IN THIS AREA
DO NOT WRITE IN THIS AREA
DO NOT WRITE IN THIS AREA

DO NOT WRITE IN THIS AREA

DO NOT WRITE IN THIS AREA

DO NOT WRITE IN THIS AREA

(c) Describe how your results should be recorded, presented and analysed in order to draw conclusions from your investigation.

(3)

DO NOT WRITE IN THIS AREA
DO NOT WRITE IN THIS AREA
DO NOT WRITE IN THIS AREA

(d) Suggest **three** limitations of your proposed method.

(3)

(Total for Question 4 = 17 marks)

TOTAL FOR PAPER = 50 MARKS

DO NOT WRITE IN THIS AREA

DO NOT WRITE IN THIS AREA

DO NOT WRITE IN THIS AREA