5 Which dot-and-cross diagram is correct for Al_2Cl_6?

A

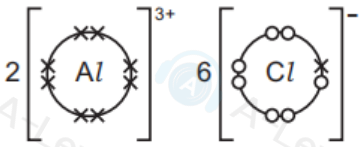

B

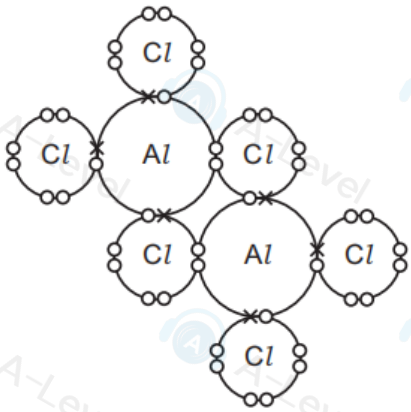

key

× = electrons from Al

○ = electrons from Cl

C

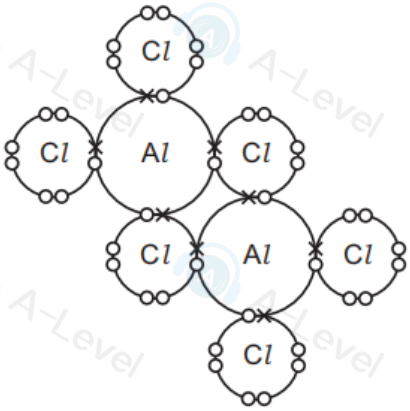

D

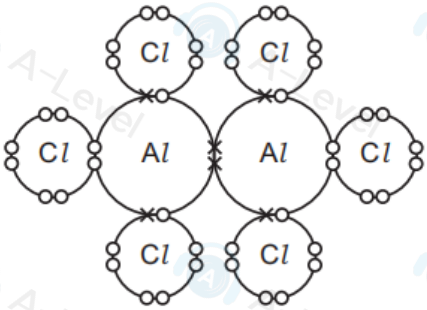

5 Which shape is correctly predicted by VSEPR theory?

	number of bonded electron pairs	number of lone pairs	shape
A	2	2	linear
B	2	2	tetrahedral
C	3	1	pyramidal
D	3	1	trigonal planar

7 Which row is correct?

	molecule	shape	total number of pairs of electrons in the valence shell of the central atom
A	CO_2	linear	two
B	BF_3	trigonal planar	three
C	NH_3	regular tetrahedral	four
D	PF_5	octahedral	six

15 Which graph represents the variation of pressure p and volume V of a sample of an ideal gas at constant temperature?

A

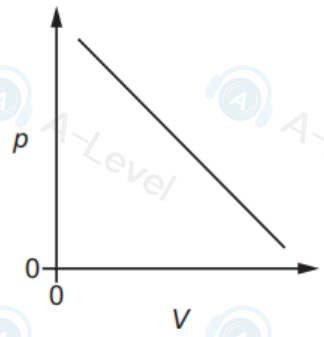

B

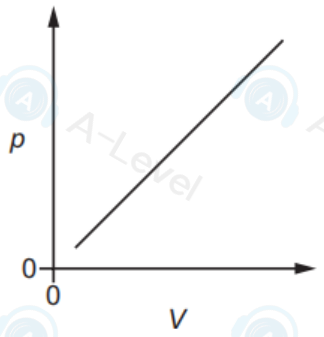

C

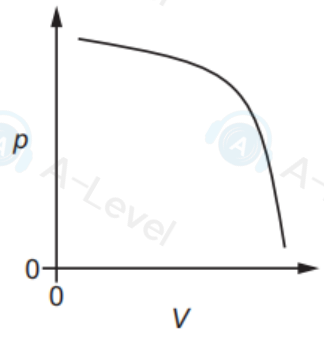

D

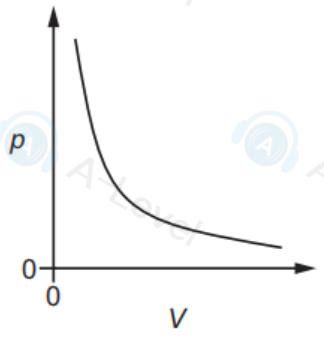

5 Atom X is the central atom in a molecule.

In this molecule, atom X has four pairs of valence electrons in its outer shell.

The four pairs of valence electrons include at least one bond pair and at least one lone pair.

What could be a possible shape for the molecule?

A linear

B non-linear

C trigonal bipyramidal

D trigonal planar

6 In which species does the underlined atom have an incomplete outer shell?

A $\underline{B}F_3$ **B** $\underline{C}H_3^-$ **C** $F_2\underline{O}$ **D** $H_3\underline{O}^+$

2 Which equation represents the first ionisation energy of iodine?

A $\frac{1}{2}I_2(g) + e^- \rightarrow I^-(g)$

B $I(g) + e^- \rightarrow I^-(g)$

C $\frac{1}{2}I_2(g) \rightarrow I^+(g) + e^-$

D $I(g) \rightarrow I^+(g) + e^-$

7 In this question you may assume that nitrogen behaves as an ideal gas. One atmosphere pressure = 101 kPa.

Which volume does 1.0 g of nitrogen occupy at 50 °C and a pressure of 2.0 atmospheres?

A 70 cm^3 **B** 150 cm^3 **C** 470 cm^3 **D** 950 cm^3

1 Which particle contains 8 protons, 9 neutrons and 10 electrons?

A $^{16}_{8}O^-$ **B** $^{16}_{8}O^{2-}$ **C** $^{17}_{8}O^-$ **D** $^{17}_{8}O^{2-}$

3 Zinc reacts with concentrated nitric acid giving three products only: zinc nitrate, an oxide of nitrogen and water.

3.0 moles of zinc react with 8.0 moles of nitric acid. Zinc nitrate contains Zn^{2+} ions.

What could be the formula of the oxide of nitrogen?

A N_2O **B** NO **C** N_2O_3 **D** NO_2

24 Iodine has a higher melting point than chlorine.

What is the reason for this?

A Iodine has stronger covalent bonds than chlorine.

B Iodine molecules have stronger permanent dipoles than chlorine molecules.

C Iodine is more volatile than chlorine.

D Iodine has stronger instantaneous dipole–induced dipole forces than chlorine.

31 Scientists are trying to synthesise a new element with proton number 119. The element is predicted to be a Group 1 element in Period 8 of the Periodic Table.

Which predictions are likely to be correct about this element?

1 The outermost occupied orbital of one atom of this element will be an s orbital.

2 The atomic radius will be the largest of the seven elements in Group 1.

3 It will have a greater first ionisation energy than element 118.

3 Which molecule does **not** have any 90° or 180° bond angles?

A C_2H_6 **B** CO_2 **C** PF_5 **D** SF_6

3 Which sodium compound contains 74.2% by mass of sodium?

A sodium carbonate

B sodium chloride

C sodium hydroxide

D sodium oxide