7.

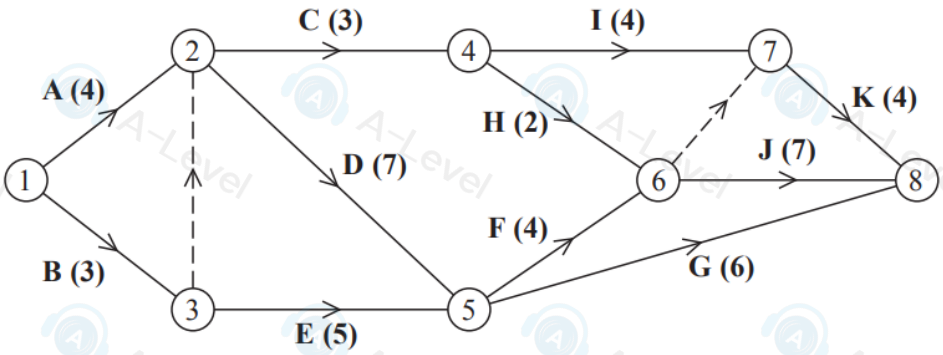

Figure 5

A company models a project by the activity network shown in Figure 5. The activities are represented by the arcs. The number in brackets on each arc gives the time, in days, to complete the activity. Each activity requires exactly one worker. The project is to be completed in the shortest possible time.

(a) Add early and late event times to Diagram 1 in the answer book.

(3)

(b) State the critical path and its length.

(2)

(c) On Diagram 2 in the answer book, construct a cascade (Gantt) chart.

(4)

(d) By using your cascade chart, state which activities **must** be happening at

(i) time 7.5

(ii) time 16.5

(2)

It is decided that the company may use up to 25 days to complete the project.

(e) On Diagram 3 in the answer book, construct a scheduling diagram to show how this project can be completed within 25 days using as few workers as possible.

(3)

(Total 14 marks)

TOTAL FOR PAPER: 75 MARKS

END

7.

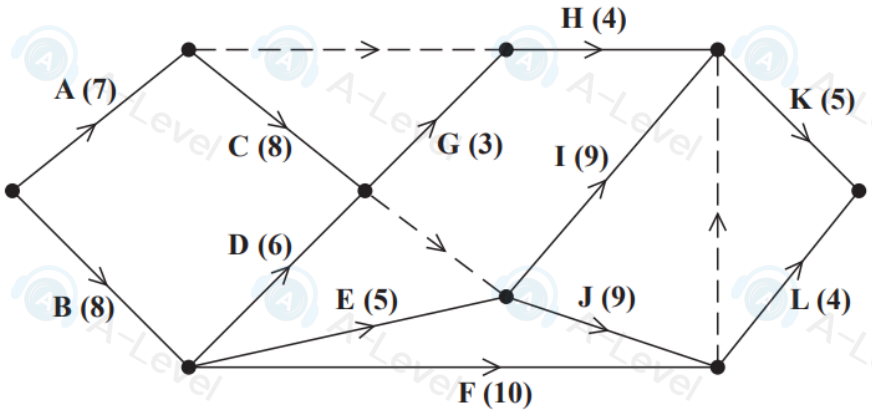

Figure 6

A project is modelled by the activity network shown in Figure 6. The activities are represented by the arcs. The number in brackets on each arc gives the time, in days, to complete the activity. Each activity requires one worker. The project is to be completed in the shortest possible time.

(a) Complete Diagram 1 in the answer book to show the early event times and late event times.

(4)

(b) Draw a cascade (Gantt) chart for this project on Grid 1 in the answer book.

(4)

(c) Use your cascade chart to determine a lower bound for the number of workers needed to complete the project in the shortest possible time. You must make specific reference to times and activities.

(2)

The project is to be completed in the minimum time using as few workers as possible.

(d) Schedule the activities, using Grid 2 in the answer book.

(4)

(Total 14 marks)

7.

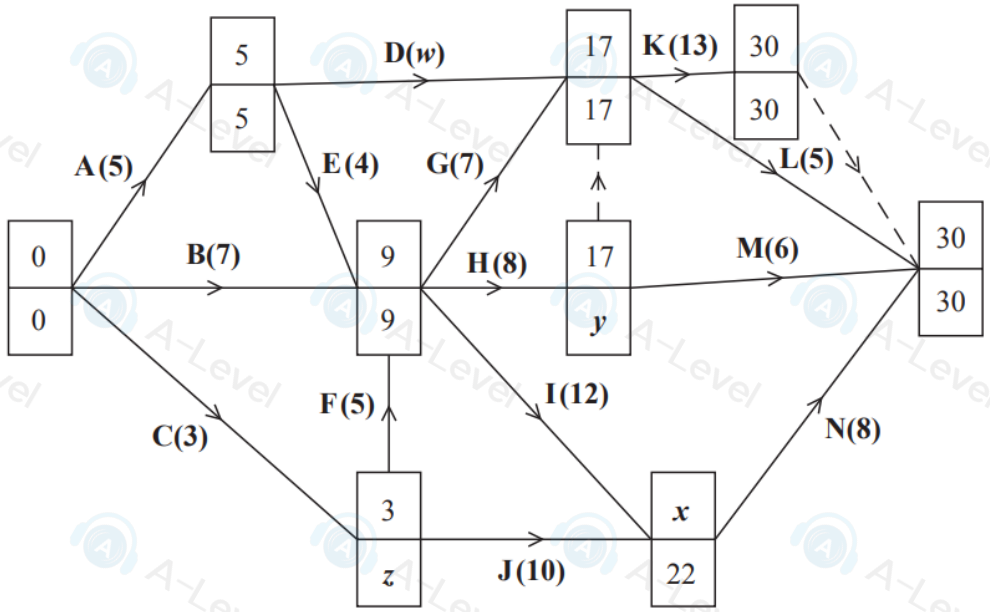

Figure 6

The network in Figure 6 shows the activities that need to be undertaken by a company to complete a project. Each activity is represented by an arc and the duration, in days, is shown in brackets. Each activity requires exactly one worker. The early event times and late event times are shown at each vertex.

Given that the total float on activity D is 1 day,

(a) find the values of w, x, y and z.

(3)

(b) On Diagram 1 in the answer book, draw a cascade (Gantt) chart for the project.

(4)

(c) Use your cascade chart to determine a lower bound for the minimum number of workers needed to complete the project in the shortest possible time. You must make specific reference to times and activities.

(2)

It is decided that the company may use up to 36 days to complete the project.

(d) On Diagram 2 in the answer book, construct a scheduling diagram to show how the project can be completed within 36 days using as few workers as possible.

(3)

(Total 12 marks)

Leave blank

7. (a)

(b)

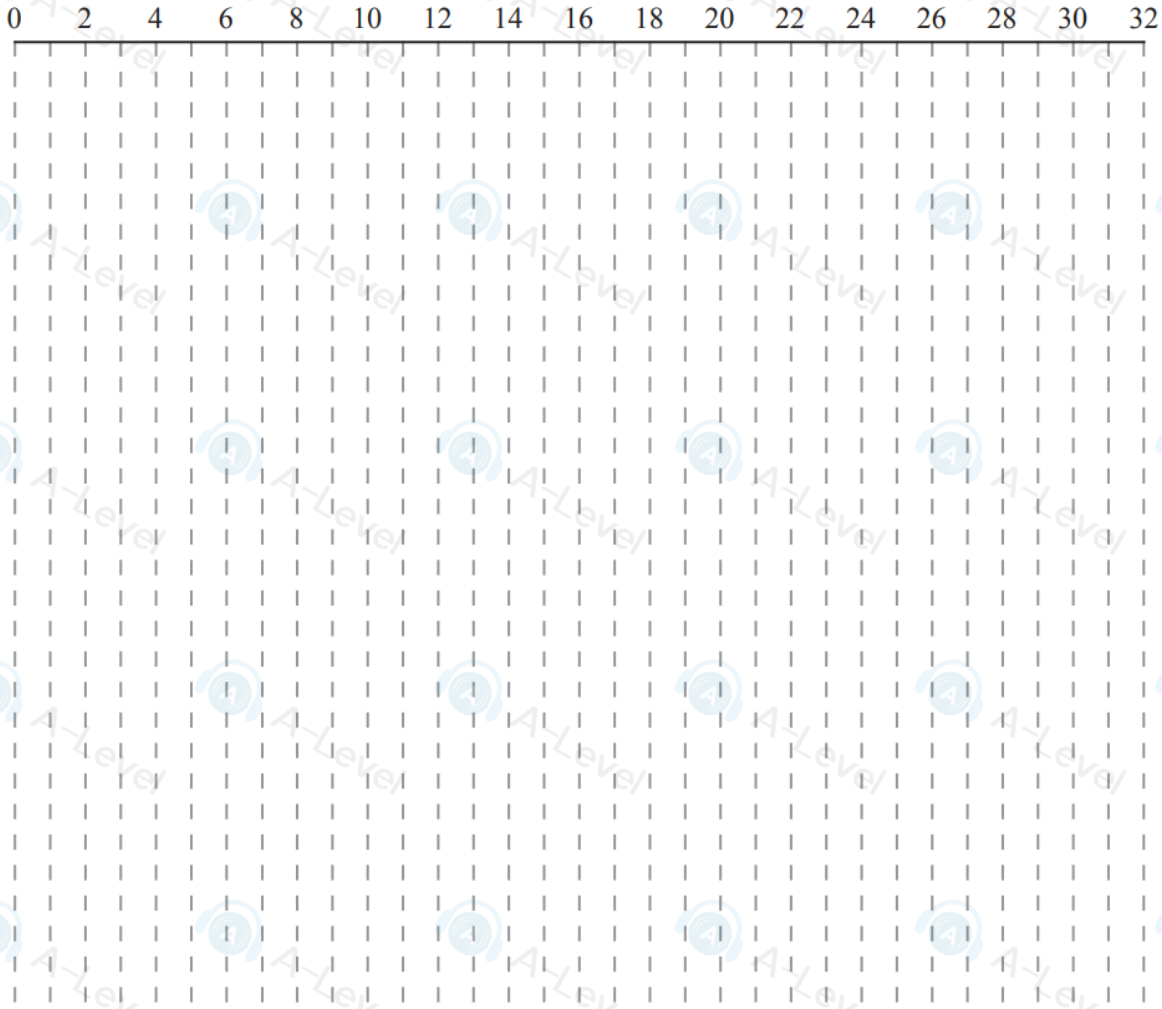

Diagram 1

DO NOT WRITE IN THIS AREA

DO NOT WRITE IN THIS AREA

DO NOT WRITE IN THIS AREA

DO NOT WRITE IN THIS AREA
DO NOT WRITE IN THIS AREA
DO NOT WRITE IN THIS AREA

Leave blank

Question 7 continued

(c)

(d)

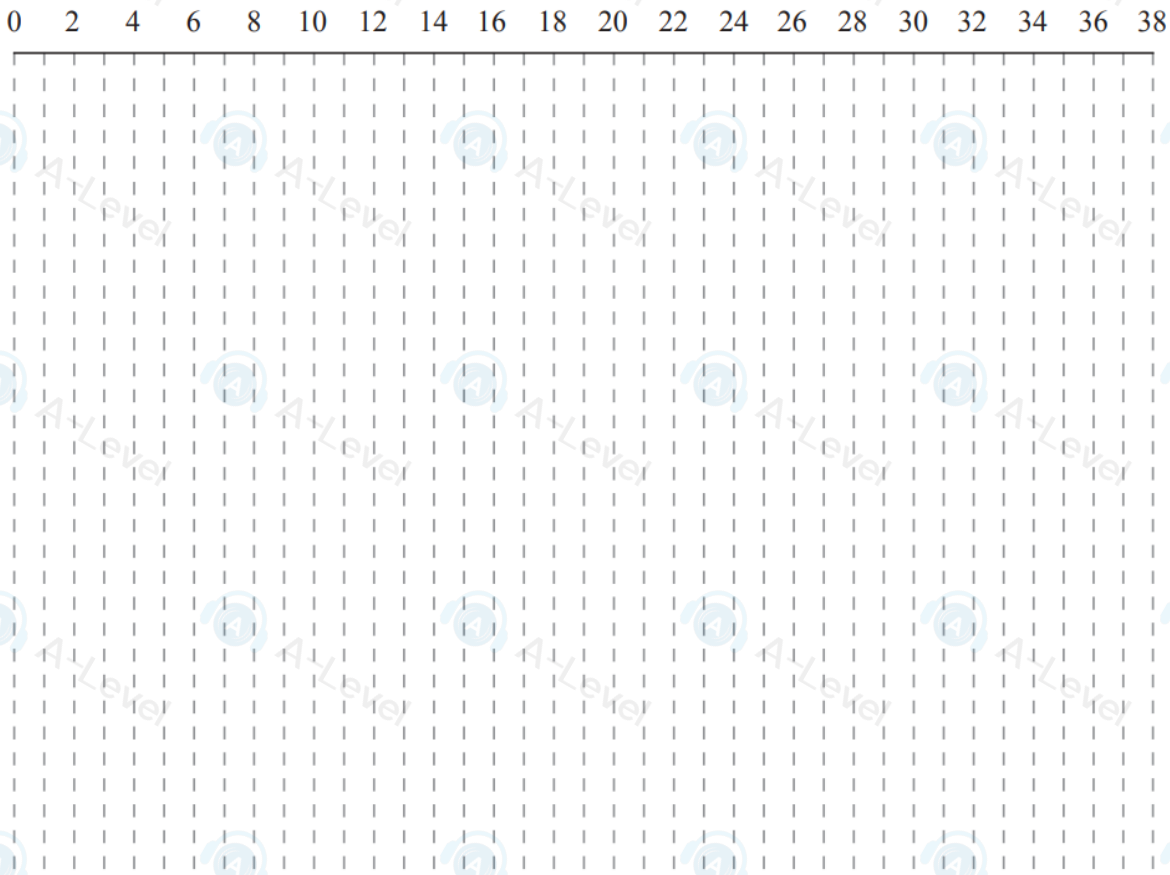

Diagram 2

Q7

(Total 12 marks)

Write your answers in the D1 answer book for this paper.

1.

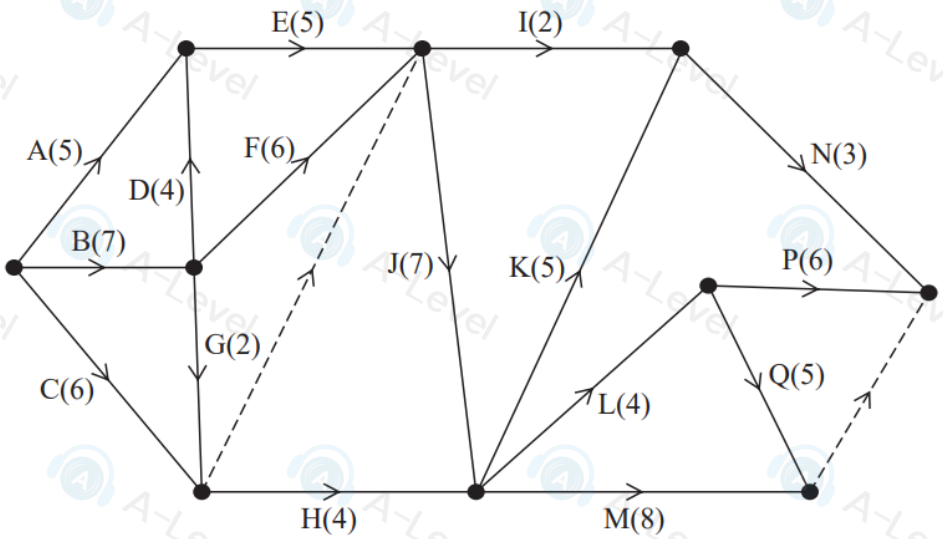

Figure 1

A project is modelled by the activity network shown in Figure 1. The activities are represented by the arcs. The number in brackets on each arc gives the time, in days, to complete the activity. Each activity requires exactly one worker. The project is to be completed in the shortest possible time.

(a) Complete Diagram 1 in the answer book to show the early event times and the late event times.

(4)

(b) Calculate the maximum number of days by which activity H could be delayed without lengthening the completion time of the project. You must make the numbers used in your calculation clear.

(1)

(c) Calculate a lower bound for the number of workers needed to complete the project in the minimum time. You must show your working.

(2)

(d) Schedule the activities on Grid 1 in the answer book, using the minimum number of workers, so that the project is completed in the minimum time.

(3)

(Total for Question 1 is 10 marks)

6.

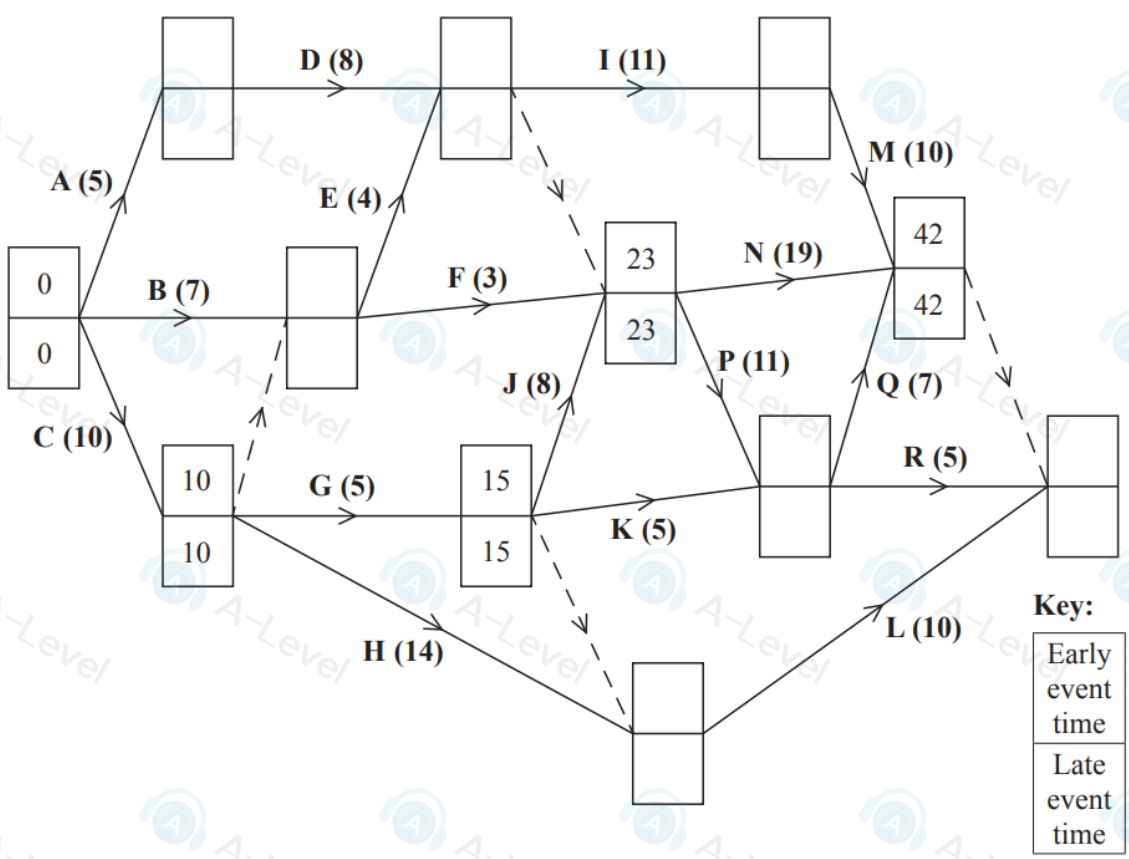

Figure 6

[*The sum of the durations of all the activities is 142 days*]

A project is modelled by the activity network shown in Figure 6. The activities are represented by the arcs. The number in brackets on each arc gives the time, in days, to complete the activity. Each activity requires one worker. The project is to be completed in the shortest possible time.

(a) Complete the precedence table in the answer book.

(2)

(b) Complete Diagram 1 in the answer book to show the early event times and late event times.

(4)

(c) Calculate the total float for activity D. You must make the numbers you use in your calculation clear.

(1)

(d) Calculate a lower bound for the number of workers needed to complete the project in the minimum time. You must show your working.

(1)

Diagram 2 in the answer book shows a partly completed scheduling diagram for this project.

(e) Complete the scheduling diagram, using the minimum number of workers, so that the project is completed in the minimum time.

(4)

(Total 12 marks)

5.

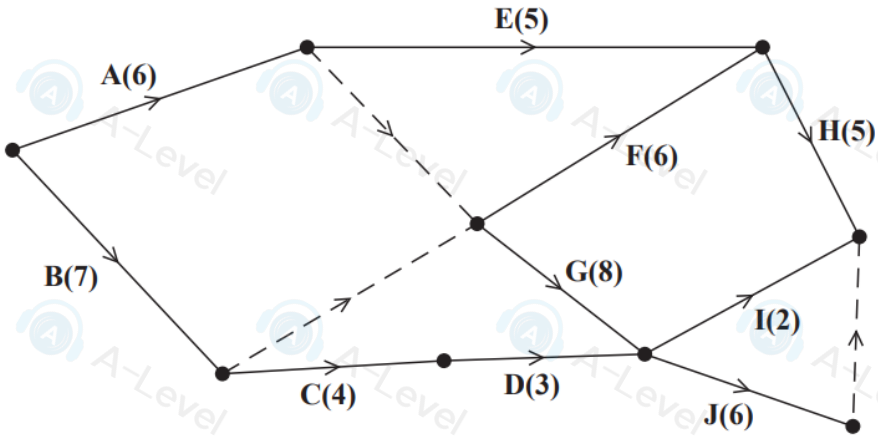

Figure 6

A project is modelled by the activity network shown in Figure 6. The activities are represented by the arcs. The number in brackets on each arc gives the time, in hours, to complete the corresponding activity. Each activity requires one worker. The project is to be completed in the shortest possible time.

(a) Complete the precedence table in the answer book.

(2)

(b) Complete Diagram 1 in the answer book to show the early event times and late event times.

(3)

(c) State the minimum project completion time and list the critical activities.

(2)

(d) Calculate the maximum number of hours by which activity E could be delayed without affecting the shortest possible completion time of the project. You must make the numbers used in your calculation clear.

(1)

(e) Calculate a lower bound for the number of workers needed to complete the project in the minimum time. You must show your working.

(1)

The project is to be completed in the minimum time using as few workers as possible.

(f) Schedule the activities using Grid 1 in the answer book.

(3)

Before the project begins it becomes apparent that activity E will require an additional 6 hours to complete. The project is still to be completed in the shortest possible time and the time to complete all other activities is unchanged.

(g) State the new minimum project completion time and list the new critical activities.

(2)

(Total 14 marks)

Leave blank

5.

Activity	Immediately preceding activities
A	
B	
C	
D	
E	

Activity	Immediately preceding activities
F	
G	
H	
I	
J	

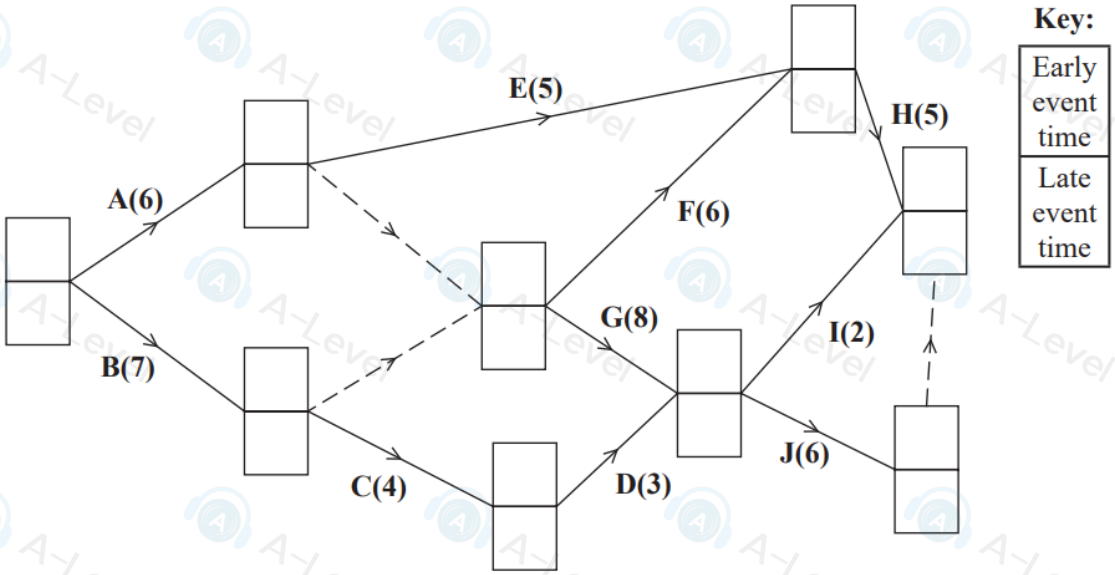

Diagram 1

DO NOT WRITE IN THIS AREA
DO NOT WRITE IN THIS AREA
DO NOT WRITE IN THIS AREA

DO NOT WRITE IN THIS AREA
DO NOT WRITE IN THIS AREA
DO NOT WRITE IN THIS AREA

Leave blank

Question 5 continued

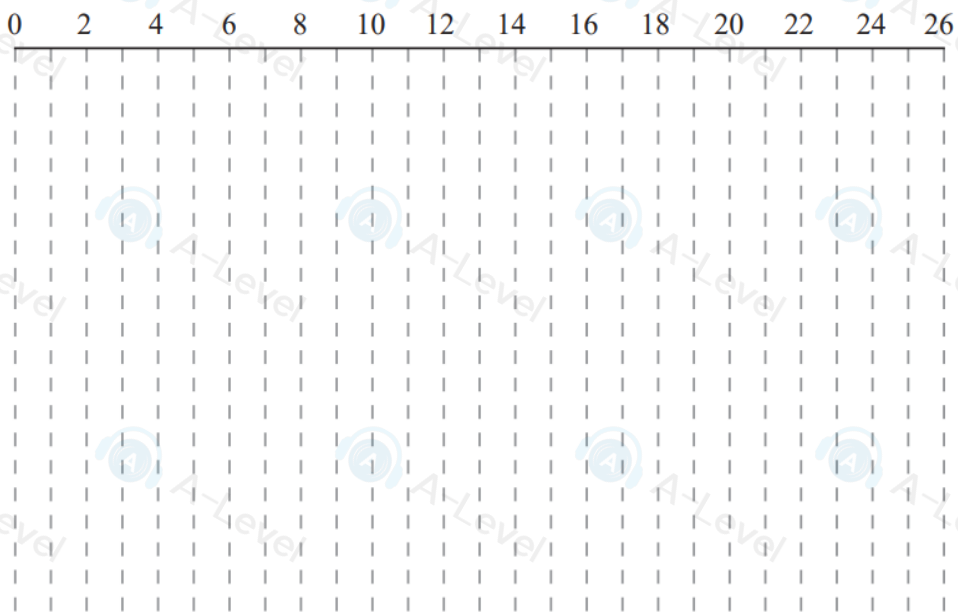

Grid 1

Q5

(Total 14 marks)

6.

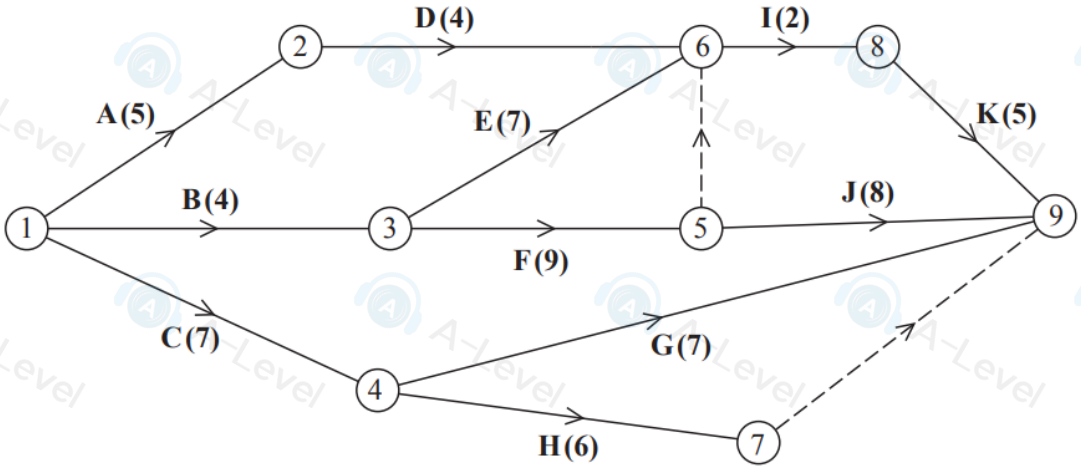

Figure 4

A project is modelled by the activity network shown in Figure 4. The activities are represented by the arcs. The number in brackets on each arc gives the time required, in hours, to complete the activity. The numbers in circles are the event numbers. Each activity requires one worker.

(a) Explain the significance of the dummy activity

(i) from event 5 to event 6

(ii) from event 7 to event 9

(2)

(b) Complete Diagram 1 in the answer book to show the early event times and the late event times.

(4)

(c) State the minimum project completion time.

(1)

(d) Calculate a lower bound for the minimum number of workers required to complete the project in the minimum time. You must show your working.

(2)

(e) On Grid 1 in your answer book, draw a cascade (Gantt) chart for this project.

(4)

(f) On Grid 2 in your answer book, construct a scheduling diagram to show that this project can be completed with three workers in just one more hour than the minimum project completion time.

(3)

(Total 16 marks)

TOTAL FOR PAPER: 75 MARKS

END

Leave blank

6. (a)

(b)

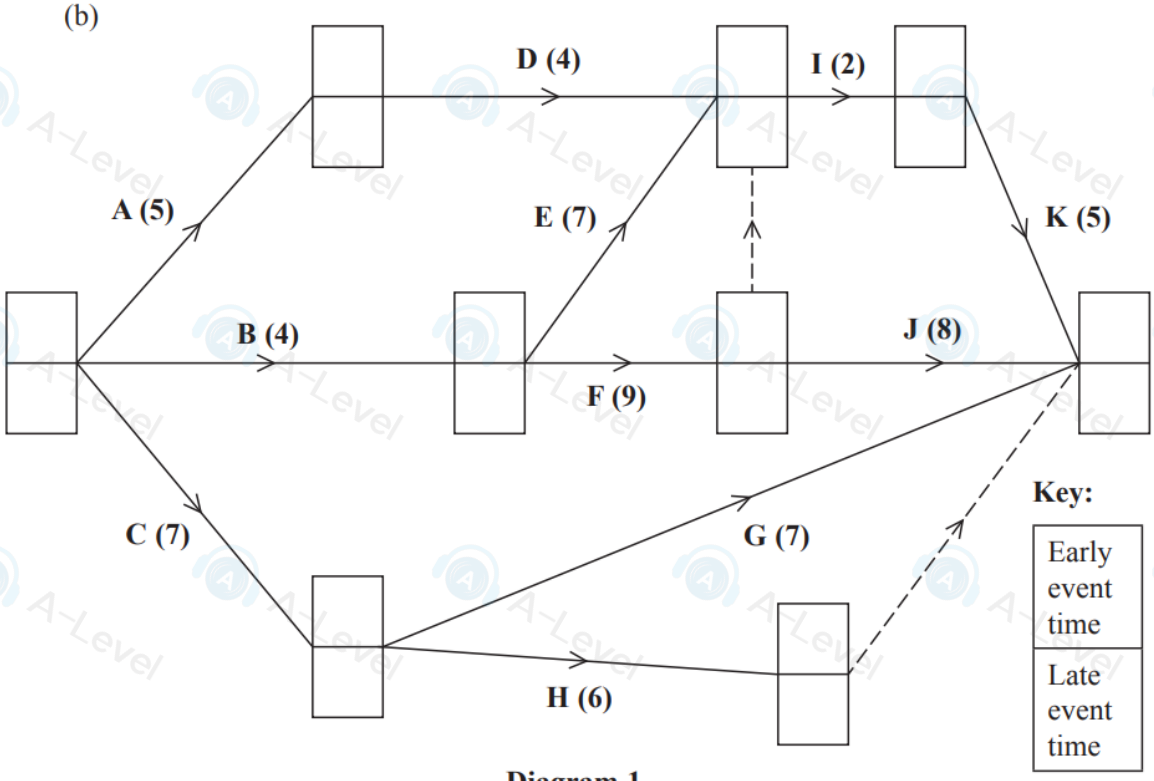

Diagram 1

DO NOT WRITE IN THIS AREA
DO NOT WRITE IN THIS AREA
DO NOT WRITE IN THIS AREA

Leave blank

Question 6 continued

(e)

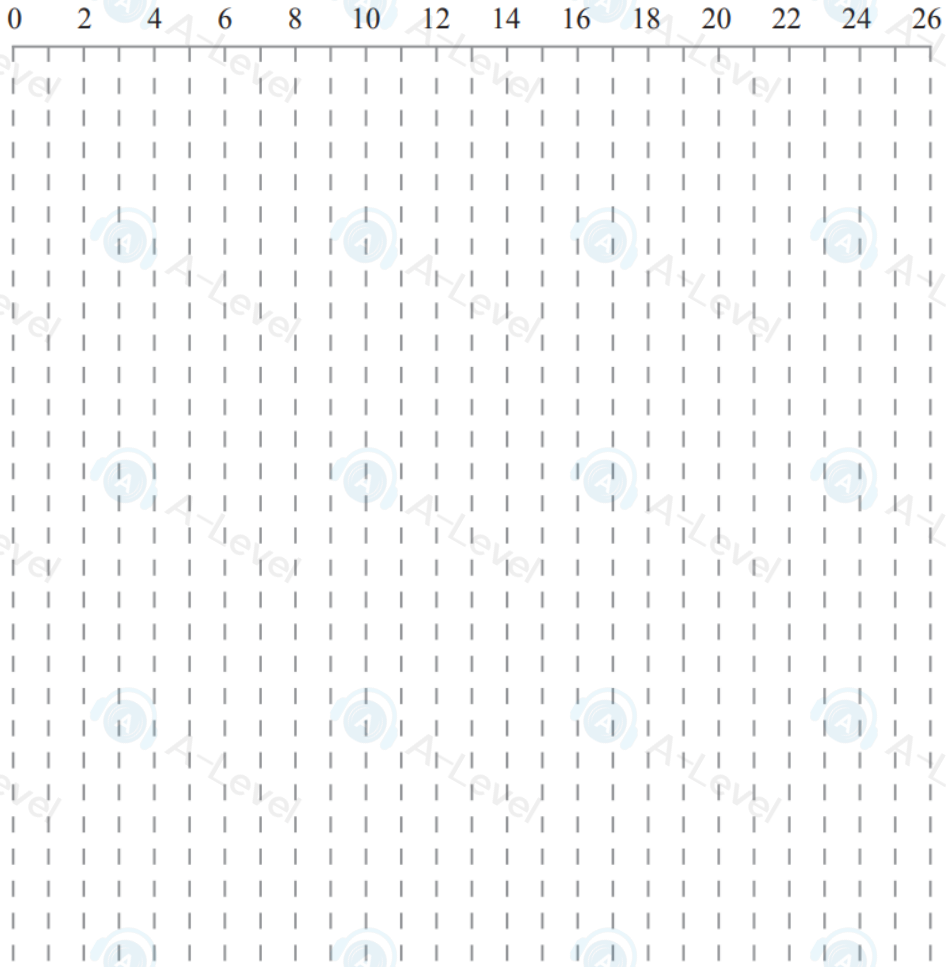

Grid 1

(f)

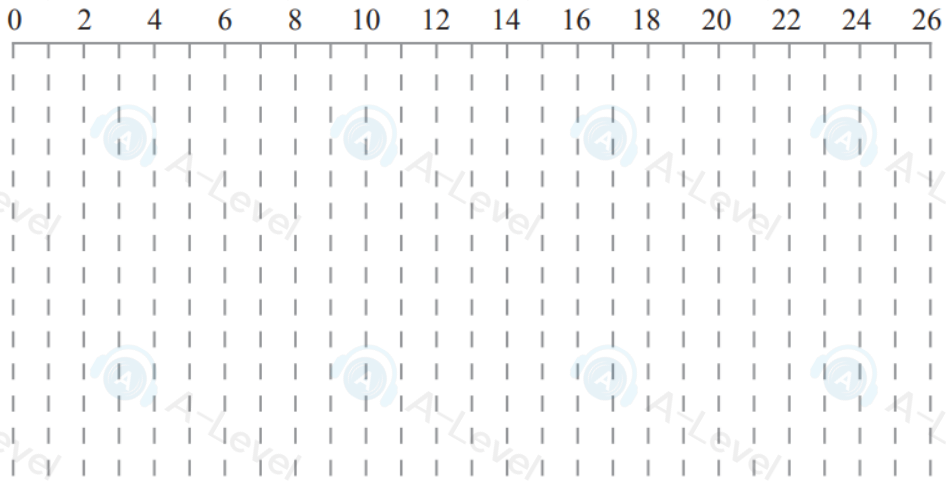

Grid 2

Q6

(Total 16 marks)

TOTAL FOR PAPER: 75 MARKS

END

DO NOT WRITE IN THIS AREA

DO NOT WRITE IN THIS AREA

DO NOT WRITE IN THIS AREA

4.

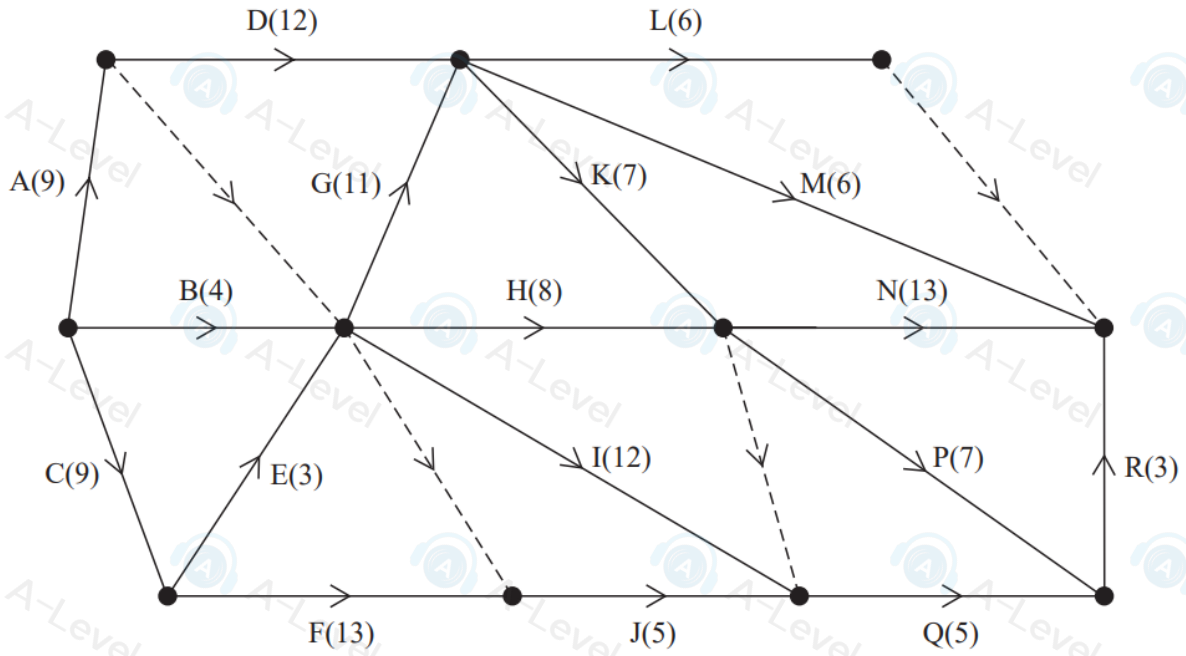

Figure 2

[*The sum of the durations of all the activities is* 133 *days*]

A project is modelled by the activity network shown in Figure 2. The activities are represented by the arcs. The number in brackets on each arc gives the time, in days, to complete the activity. Each activity requires one worker. The project is to be completed in the shortest possible time.

(a) Complete the precedence table in the answer book.

(2)

(b) Complete Diagram 1 in the answer book to show the early event times and the late event times.

(4)

(c) State the critical activities.

(1)

(d) Calculate the total float for activity J. You must make the numbers you use in your calculation clear.

(1)

(e) Calculate a lower bound for the number of workers needed to complete the project in the minimum time. You must show your working.

(1)

Diagram 2 in the answer book shows a partly completed scheduling diagram for this project.

(f) Complete the scheduling diagram, using the minimum number of workers, so that the project is completed in the minimum time.

(4)

(Total for Question 4 is 13 marks)

7.

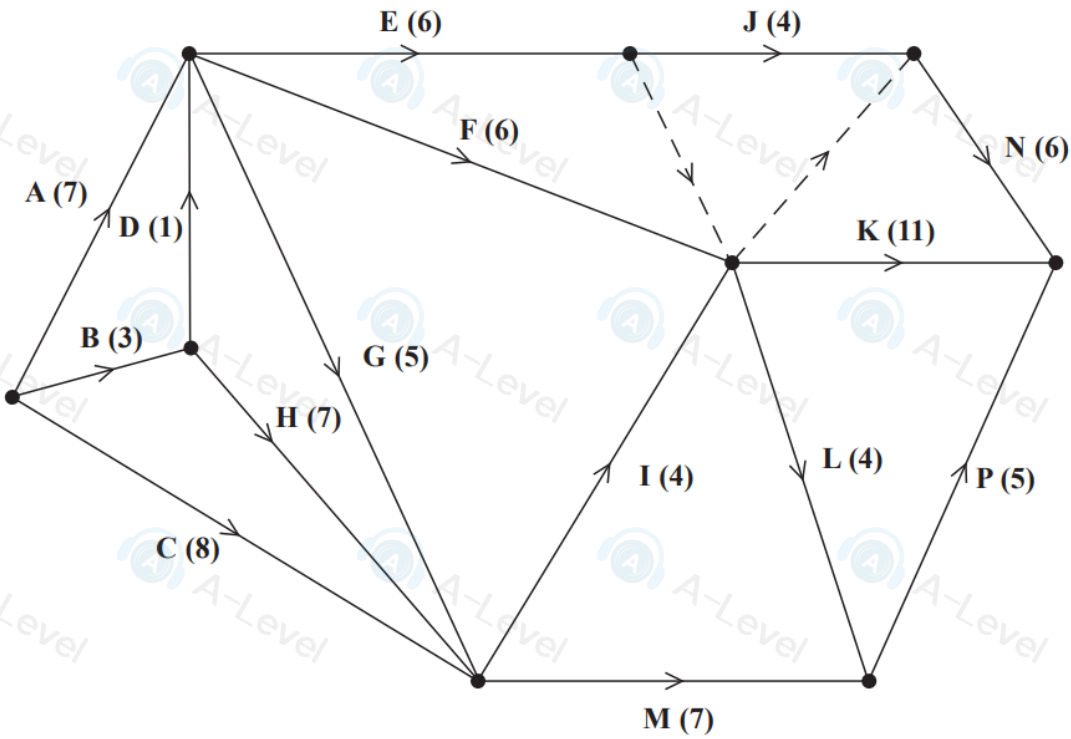

Figure 5

A project is modelled by the activity network shown in Figure 5. The activities are represented by the arcs. The number in brackets on each arc gives the time, in days, to complete the corresponding activity. Each activity requires exactly one worker. The project is to be completed in the shortest possible time.

(a) Complete Diagram 1 in the answer book to show the early event times and late event times.

(4)

(b) Explain what is meant by a critical path.

(2)

(c) List the critical path for this network.

(1)

(d) For each of the situations below, state the effect that the delay would have on the project completion date.

(i) A 4-day delay during activity J.
(ii) A 4-day delay during activity M.

(2)

The delays mentioned in (d) do not occur.

(e) Calculate a lower bound for the number of workers needed to complete the project in the minimum time. You must show your working.

(2)

(f) Schedule the activities using the minimum number of workers so that the project is completed in the minimum time.

(3)

(Total 14 marks)

Leave blank

7. (a)

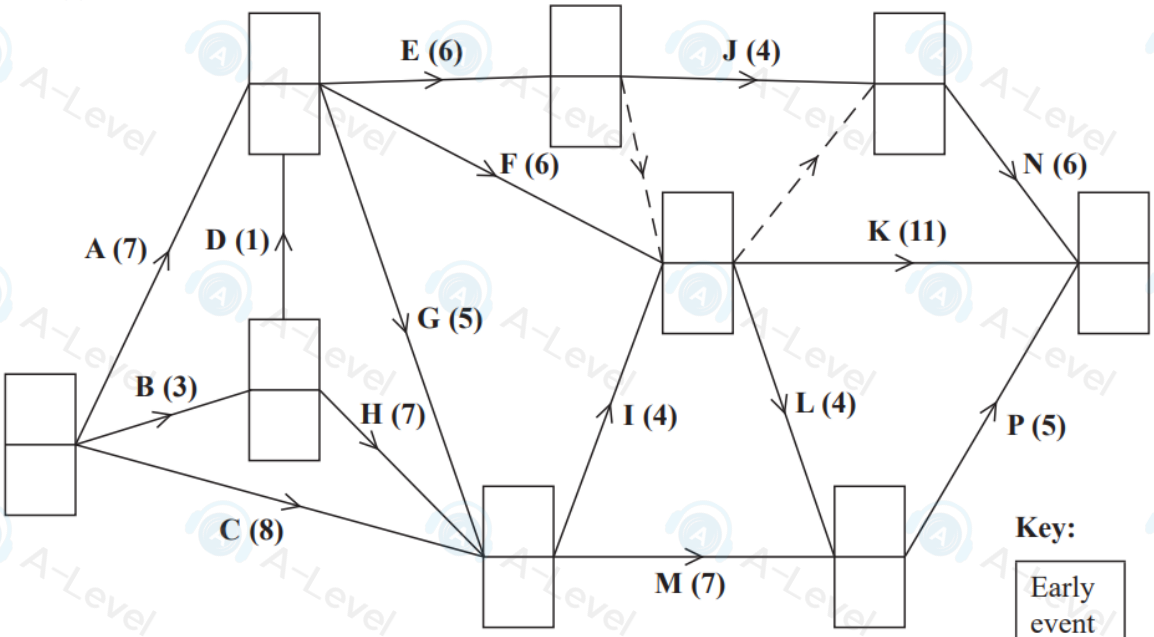

Diagram 1

DO NOT WRITE IN THIS AREA
DO NOT WRITE IN THIS AREA
DO NOT WRITE IN THIS AREA

DO NOT WRITE IN THIS AREA
DO NOT WRITE IN THIS AREA
DO NOT WRITE IN THIS AREA

Leave blank

Question 7 continued

(f)

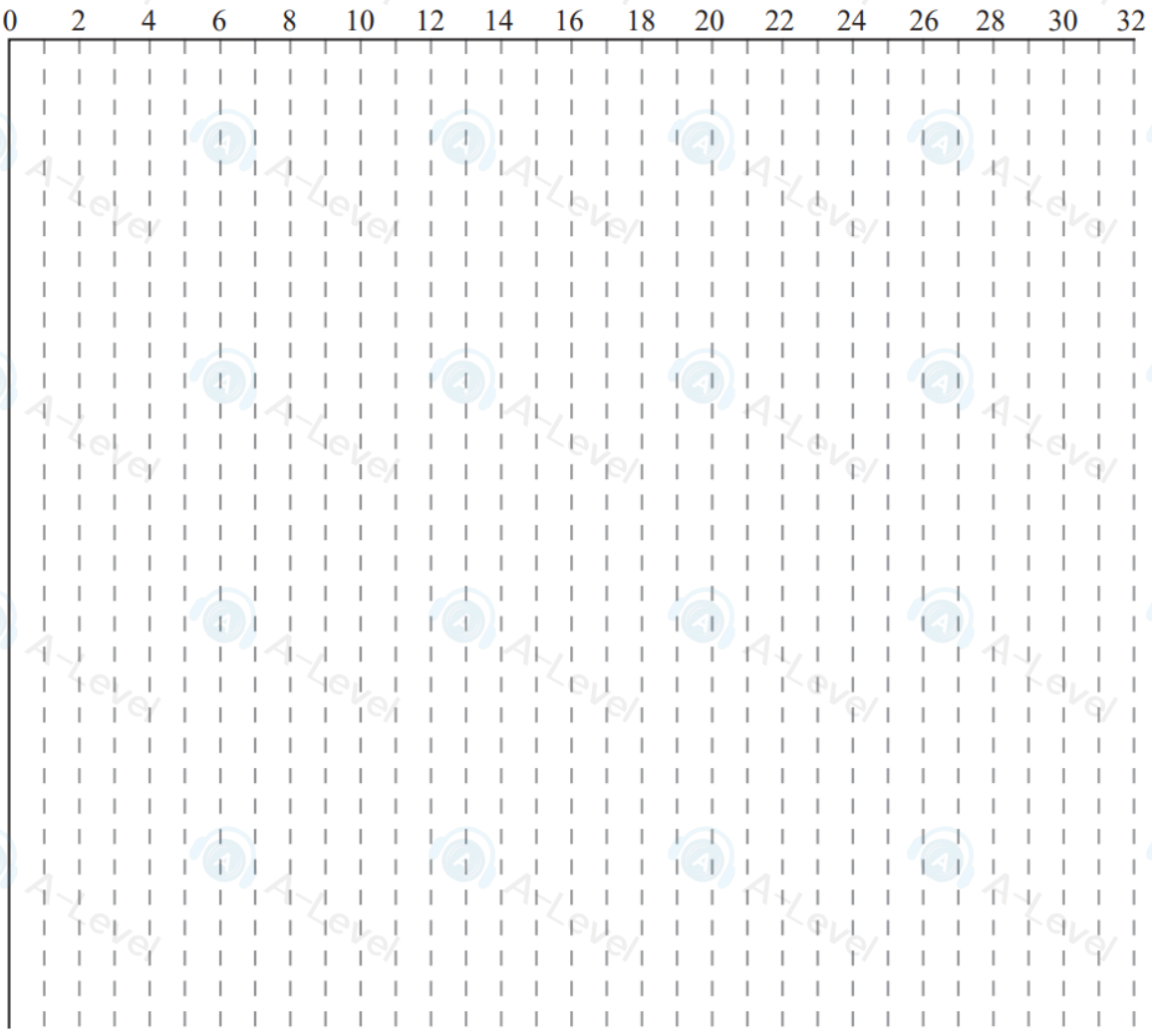

Q7

(Total 14 marks)