3 Which row in the table shows the total resistance if two 5 Ω resistors are connected in series and in parallel?

	Series	Parallel
☒ **A**	2.5 Ω	10 Ω
☒ **B**	2.5 Ω	2.5 Ω
☒ **C**	10 Ω	10 Ω
☒ **D**	10 Ω	2.5 Ω

(Total for Question 3 = 1 mark)

2 In the combination shown below, each resistor has a resistance of 6 Ω.

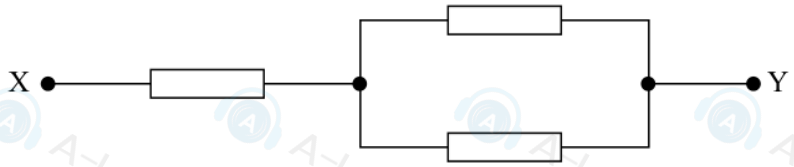

Which of the following is the total resistance between X and Y?

☒ **A** 2 Ω

☒ **B** 4 Ω

☒ **C** 9 Ω

☒ **D** 18 Ω

(Total for Question 2 = 1 mark)

DO NOT WRITE IN THIS AREA
DO NOT WRITE IN THIS AREA
DO NOT WRITE IN THIS AREA

9 The definitions for current and potential difference both include

- ☐ **A** charge.
- ☐ **B** resistance.
- ☐ **C** time.
- ☐ **D** work done.

(Total for Question 9 = 1 mark)

2 The current in a wire is 25 mA.

Calculate the total charge that passes a point in the wire in 200 s.

- ☐ **A** 1.25×10^{-4} C
- ☐ **B** 1.25×10^{-1} C
- ☐ **C** 5.00 C
- ☐ **D** 5.00×10^{3} C

(Total for Question 2 = 1 mark)

1 The resistance of some electrical components decreases as the applied potential difference increases.

Which row of the table contains two components that behave in this way?

☐ **A**	diode	ohmic conductor
☐ **B**	ohmic conductor	filament lamp
☐ **C**	negative temperature coefficient thermistor	diode
☐ **D**	negative temperature coefficient thermistor	filament lamp

(Total for Question 1 = 1 mark)

7 A negative temperature coefficient thermistor is connected in a circuit as shown.

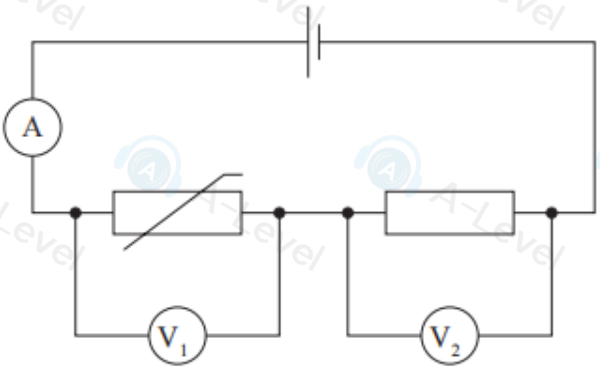

The temperature of the thermistor is increased.

Which row of the table shows how the readings on meters V_1 and V_2 and A change?

	Reading on V_1	Reading on V_2	Reading on A
☒ **A**	decreases	increases	increases
☒ **B**	decreases	stays the same	increases
☒ **C**	increases	decreases	decreases
☒ **D**	increases	stays the same	decreases

(Total for Question 7 = 1 mark)

2 The battery in the circuit shown has a negligible internal resistance.
Resistor R_1 and resistor R_2 are identical.

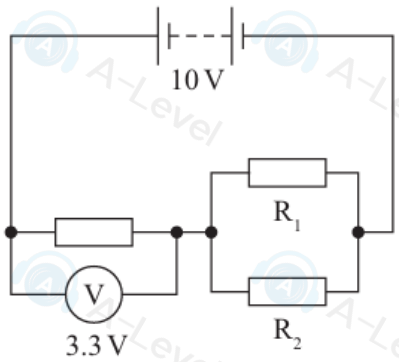

Which of the following expressions gives the potential difference across resistor R_1 in volts?

☒ **A** $\frac{1}{2} \times 3.3$

☒ **B** 3.3

☒ **C** $\frac{1}{2} \times (10 - 3.3)$

☒ **D** $10 - 3.3$

(Total for Question 2 = 1 mark)

DO NOT WRITE IN THIS AREA
DO NOT WRITE IN THIS AREA
DO NOT WRITE IN THIS AREA
DO NOT WRITE IN THIS AREA

DO NOT WRITE IN THIS AREA

4 The circuit shows a cell of emf ε with internal resistance of r connected to a resistor of resistance R. The current in the circuit is I.

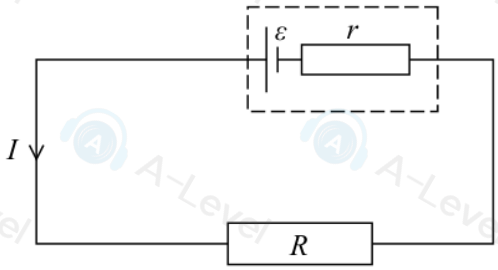

Which of the following is an expression for the terminal potential difference V across the cell?

- ☒ **A** $V = \varepsilon + IR$
- ☒ **B** $V = \varepsilon - IR$
- ☒ **C** $V = \varepsilon + Ir$
- ☒ **D** $V = \varepsilon - Ir$

(Total for Question 4 = 1 mark)

13 A student investigated how light intensity affects the resistance of a light dependent resistor (LDR).
She set up a circuit using a cell with negligible internal resistance, as shown.

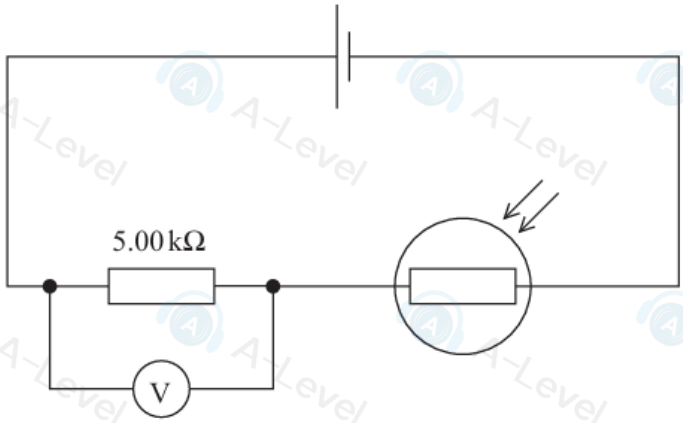

The e.m.f. of the cell was 1.50 V. When the lights in the laboratory were switched off, the voltmeter reading was 1.19 V.

(a) Calculate the resistance of the LDR when the lights were off.

(2)

Resistance of LDR = ...

(b) When the lights were switched back on, the student discovered that it was impossible to calculate the resistance of the LDR using this circuit. The teacher said that with the lights on, the resistance of the LDR was about 9 Ω.

Explain why the student was unable to use the circuit to determine the resistance of the LDR with the lights on. The resolution of the voltmeter was 0.01 V.

(2)

(Total for Question 13 = 4 marks)

DO NOT WRITE IN THIS AREA
DO NOT WRITE IN THIS AREA
DO NOT WRITE IN THIS AREA

19 A student plots a graph of current I against potential difference (p.d.) V for a light emitting diode (LED).

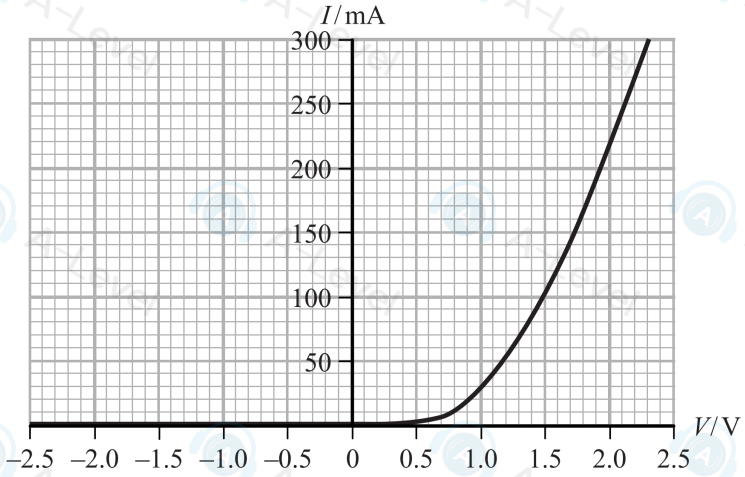

(a) State the measurements the student should make to plot the graph. Your answer should include a suitable circuit diagram.

(4)

DO NOT WRITE IN THIS AREA
DO NOT WRITE IN THIS AREA
DO NOT WRITE IN THIS AREA
DO NOT WRITE IN THIS AREA
DO NOT WRITE IN THIS AREA
DO NOT WRITE IN THIS AREA

(b) (i) Determine the resistance of the LED when $V = +2.0\,V$.

(2)

Resistance of LED = ...

(ii) State the resistance of the LED when $V = -2.0\,V$.

(1)

.....

(c) The student is told that the LED will be damaged if the current is too large. To avoid damage the LED is connected in a circuit so that it is in series with a resistor of resistance R, to limit the size of the current.

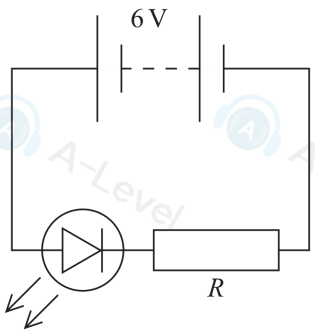

(i) With reference to the current-p.d. characteristics state why, without the resistor, the current through the LED could become too large.

(1)

.....

.....

DO NOT WRITE IN THIS AREA
DO NOT WRITE IN THIS AREA
DO NOT WRITE IN THIS AREA
DO NOT WRITE IN THIS AREA
DO NOT WRITE IN THIS AREA
DO NOT WRITE IN THIS AREA

(ii) The intensity of the light emitted by the LED depends on the magnitude of the current through the LED. 95% of the electrons flowing through the LED cause a photon to be emitted.

The rate at which photons are emitted by the LED is 1.6×10^{18} s^{-1}.

Use the graph to determine the value of R that will produce this rate of emission of photons.

(5)

R = ...

(iii) With a different value of R the p.d. across the LED is 1.8 V. The energy of the emitted photon is 77% of the work done on the electron as it moves through this p.d..

Calculate the energy of the photon.

(3)

Energy = ...

(Total for Question 19 = 16 marks)

TOTAL FOR SECTION B = 70 MARKS
TOTAL FOR PAPER = 80 MARKS

DO NOT WRITE IN THIS AREA DO NOT WRITE IN THIS AREA DO NOT WRITE IN THIS AREA DO NOT WRITE IN THIS AREA

18 Four identical resistors, A, B, C and D, are placed in a circuit as shown.

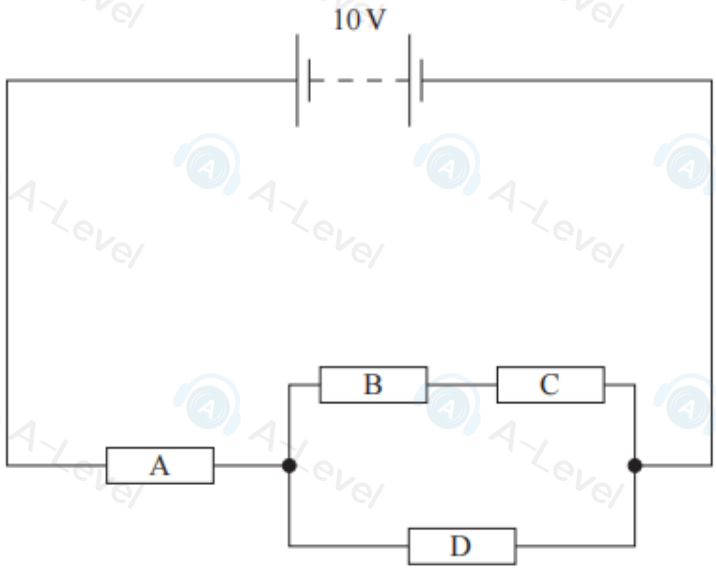

(a) Determine the power dissipated in each of the resistors.

resistance of each resistor = 2.0 Ω

(6)

DO NOT WRITE IN THIS AREA
DO NOT WRITE IN THIS AREA
DO NOT WRITE IN THIS AR

(b) Explain, without further calculation, what would happen to the power dissipated by resistor A if resistor D were disconnected from the circuit.

(2)

(c) If the resistors in the circuit used in (a) were replaced with filament lamps, the resistance of each lamp would be different depending on the potential difference across it.

Explain, in terms of particles, why the resistance of a filament lamp increases as the potential difference across the filament increases.

(4)

(Total for Question 18 = 12 marks)

DO NOT WRITE IN THIS AREA

DO NOT WRITE IN THIS AREA

12 A student investigated the internal resistance of a cell, using the circuit shown.

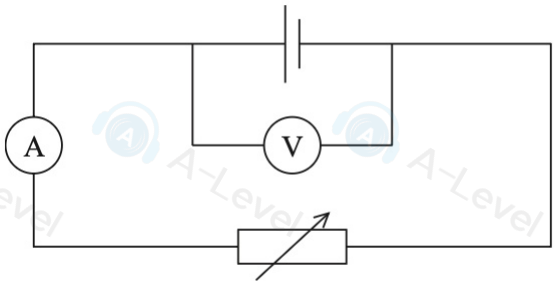

The student used the variable resistor to vary the reading on the ammeter. He recorded corresponding readings from the voltmeter.

The student plotted the results on a graph, as shown.

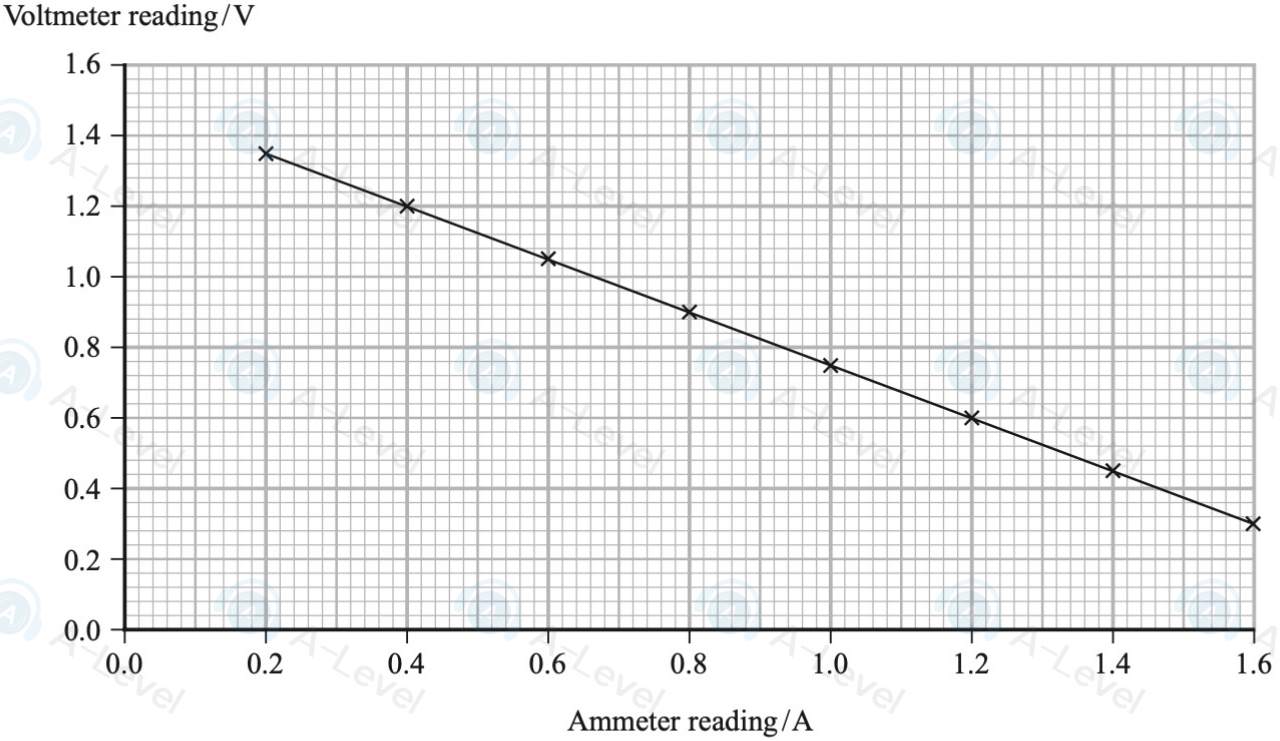

(a) Determine the e.m.f. ε of the cell, and the internal resistance r of the cell.

(3)

.....

.....

.....

.....

.....

ε = ...

r = ...

(b) The student placed an identical cell in series with the original cell in the circuit. He connected the voltmeter across both cells and repeated the investigation.

The student plotted a new graph of these voltmeter and ammeter readings.

Describe how the new graph is different from the graph for one cell.

(2)

DO NOT WRITE IN THIS AREA
DO NOT WRITE IN THIS AREA
DO NOT WRITE IN THIS AREA