2 A student investigated the efficiency of an electric motor, using the apparatus shown.

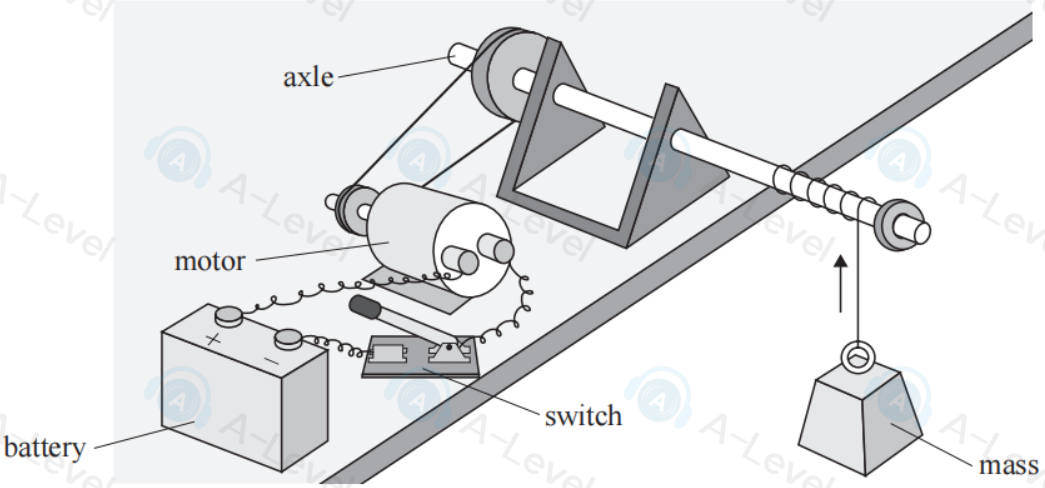

(a) The motor was connected in a circuit including a battery and a switch.

The student connected additional components to determine the power of the motor.

Complete the circuit diagram for the circuit the student should use.

(2)

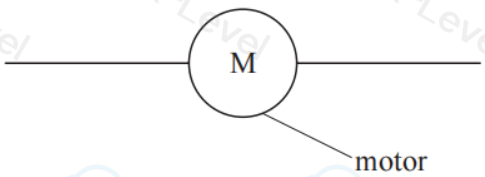

DO NOT WRITE IN THIS AREA
DO NOT WRITE IN THIS AREA
DO NOT WRITE IN THIS ARE

DO NOT WRITE IN THIS AREA

DO NOT WRITE IN THIS AREA

(b) The student closed the switch in the circuit, and the motor lifted the mass from the floor.

She used a metre rule to measure the height gained by the 1 kg mass in 10 s.

(i) Describe how she should measure a single value of the height gained as accurately as possible.

You should include the use of any additional apparatus needed.

(4)

(ii) Explain why repeat measurements are appropriate for this measurement.

(2)

(c) Explain how the measurements made by the student should be used to determine the efficiency of the motor as it lifts the mass.

(3)

(Total for Question 2 = 11 marks)

DO NOT WRITE IN THIS AREA

DO NOT WRITE IN THIS AREA

DO NOT WRITE IN THIS AREA

2 A student models a safety system used on a railway.

Two parallel 30 cm copper rods model the rails. These rods are fixed 5 cm apart and are connected to an ohmmeter.

A movable copper rod models the train. This rod completes the circuit with the ohmmeter, as shown.

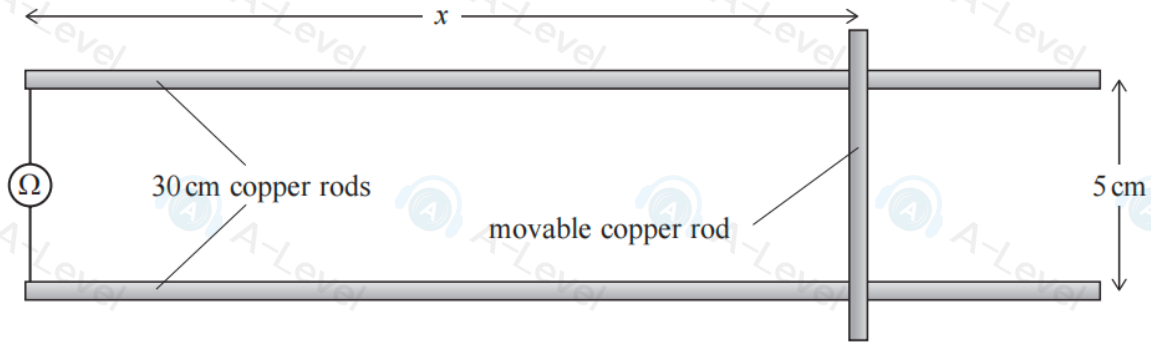

As the distance x varies, the resistance R of the circuit varies.

(a) Describe how the student could determine accurate values of x and R.

(4)

.....

.....

.....

.....

.....

(b) The student measured values of x and corresponding values of R and plotted a graph of his measurements.

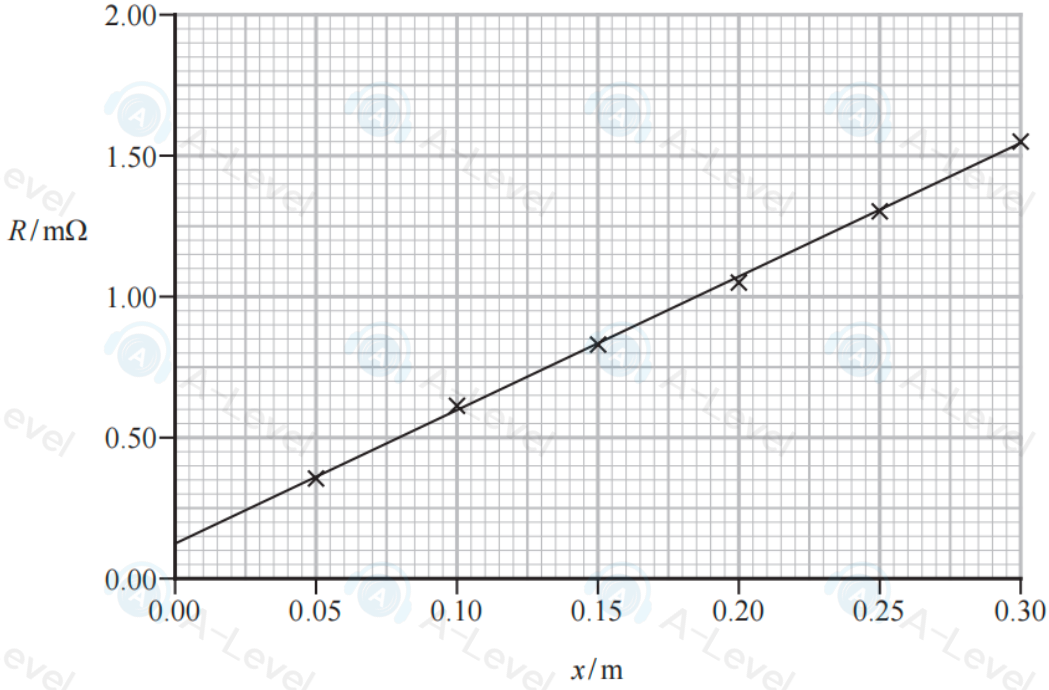

State why the line of best fit does not pass through the origin.

(1)

.....

.....

(d) The safety system of the railway estimates the position of a train on the track using a resistance measurement.

The rails become worn with continual use, so their cross-sectional area decreases.

Explain how the decrease in cross-sectional area affects the estimate of the position of a train.

(2)

.....

.....

.....

.....

.....

.....

(Total for Question 2 = 11 marks)

DO NOT WRITE IN THIS AREA
DO NOT WRITE IN THIS AREA
DO NOT WRITE IN T
OT WRITE IN THIS AREA

DO NOT WRITE IN T

OT WRITE IN THIS AREA

(d) The safety system of the railway estimates the position of a train on the track using a resistance measurement.

The rails become worn with continual use, so their cross-sectional area decreases.

Explain how the decrease in cross-sectional area affects the estimate of the position of a train.

(2)

.....

.....

.....

.....

.....

.....

(Total for Question 2 = 11 marks)

1 A student had a stack of 500 sheets of paper. He measured the dimensions shown.

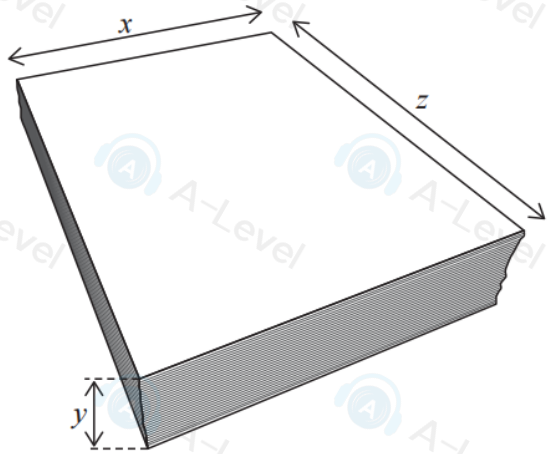

(a) The student used a balance to determine the mass of the stack of paper. The reading is shown below.



(i) State the resolution of the balance.

(1)

.....

.....

(ii) Determine the percentage uncertainty in the mass of the stack of paper.

(2)

.....

.....

.....

Percentage uncertainty = ...

(b) The student used vernier calipers to measure the thickness y of the stack of paper.

Explain **one** technique he should use to determine an accurate value for y.

(2)

.....

.....

.....

.....

DO NOT WRITE IN THIS AREA
DO NOT WRITE IN THIS AREA
DO NOT WRIT
NOT WRITE IN THIS AREA

DO NOT WRITE IN THIS AREA

(c) The student used the measurements from the stack of paper to determine the density of the paper.

(i) Determine the density of the paper in $g\,cm^{-3}$

$x = 210\,mm$
$y = 42.7\,mm$
$z = 297\,mm$

(2)

.....

.....

.....

Density = ... $g\,cm^{-3}$

DO NOT WRITE IN THIS AREA

(ii) Explain why making measurements on the whole stack of paper is better than making measurements on a single sheet of paper.

(2)

.....

.....

.....

.....

(Total for Question 1 = 9 marks)

3 A student determined the speed of ultrasound in air using the apparatus shown.

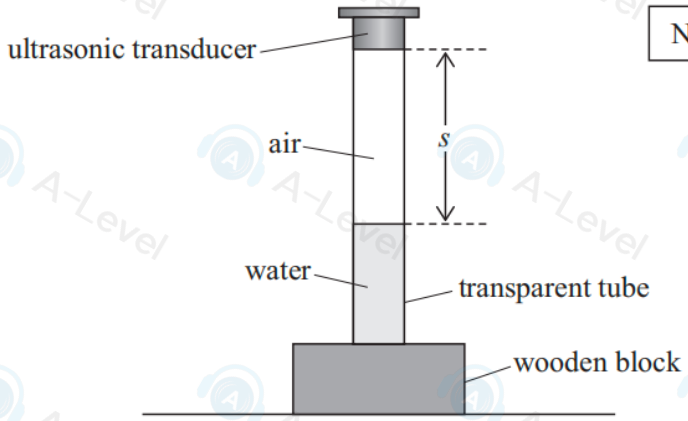

Not to scale

(a) The student added water to the transparent tube to change the length s of the air column.

Describe a method to determine a single value of s as accurately as possible, using a metre rule.

Your method may include additional apparatus.

(3)

.....

.....

.....

.....

.....

.....

DO NOT WRITE IN THIS AREA
DO NOT WRITE IN THIS AREA

DO NOT WRITE IN THIS AREA
DO NOT WRITE IN THIS AREA
AREA

(b) The ultrasonic transducer emitted pulses of ultrasound.

The emitted pulses were reflected at the water surface and then detected when they returned to the ultrasonic transducer.

The student connected an oscilloscope to the transducer, to determine the time between an emitted pulse and the reflected pulse.

The oscilloscope screen is shown below.

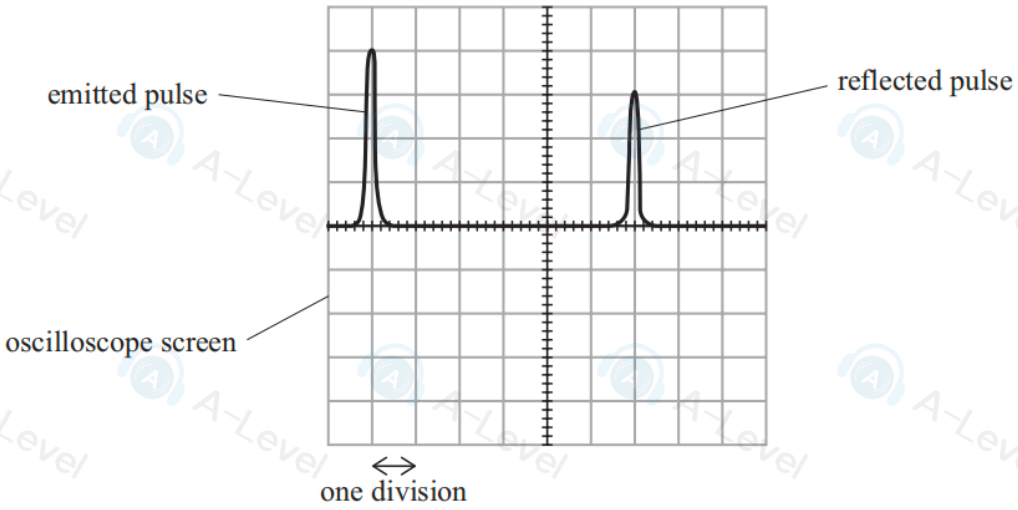

The horizontal axis represents time.

The time scale was set to 0.5 ms per division.

Show that, for this example, the speed v of ultrasound in air was about 330 m s^{-1}.

length of air column s = 49.7 cm

(4)

.....

.....

.....

.....

(c) The student varied s and determined corresponding values for v. He recorded the following values.

v / m s^{-1}	335	347	339	342

(i) Determine the mean value of v.

(2)

.....

.....

Mean value of v = ...

(ii) Determine the percentage uncertainty in the mean value of v.

(2)

.....

.....

.....

Percentage uncertainty = ...

(d) The student modified the apparatus to determine the speed of sound in water.

He determined the speed of sound in water to be 1444 m s^{-1} with a 4% uncertainty.

The accepted value for the speed of sound in water is 1481 m s^{-1}.

Deduce whether the student's value for the speed of sound in water is consistent with the accepted value.

Your answer should include a calculation.

(2)

.....

.....

.....

.....

(Total for Question 3 = 13 marks)

DO NOT WRITE IN THIS AREA DO NOT WRITE IN THIS AREA DO NOT WRITE IN THIS AREA

(b) The student used vernier calipers to determine the lengths a, b and c.

Not to scale

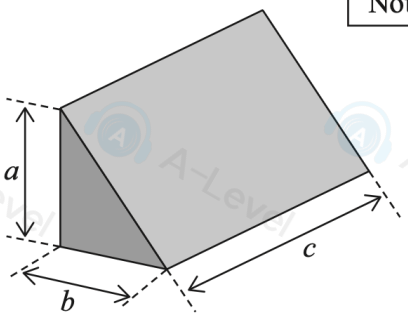

(i) Explain one technique he should use to determine accurate values for these lengths.

(2)

.....

.....

.....

.....

(ii) The student checked that the angle between the side of length a and the side of length b was a right angle. He did not have a set square or an instrument to measure the angle directly.

Describe how he could use one other measurement and a calculation to check this angle.

(2)

.....

.....

.....

DO NOT WRITE IN THIS AREA
DO NOT WRITE IN THIS AREA

(b) The student used vernier calipers to determine the lengths a, b and c.

Not to scale

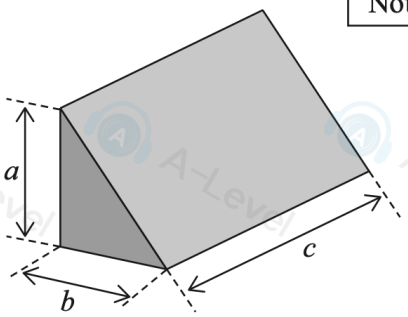

(i) Explain one technique he should use to determine accurate values for these lengths.

(2)

.....

.....

.....

.....

(ii) The student checked that the angle between the side of length a and the side of length b was a right angle. He did not have a set square or an instrument to measure the angle directly.

Describe how he could use one other measurement and a calculation to check this angle.

(2)

.....

.....

.....

DO NOT WRITE IN THIS AREA
DO NOT WRITE IN THIS AREA